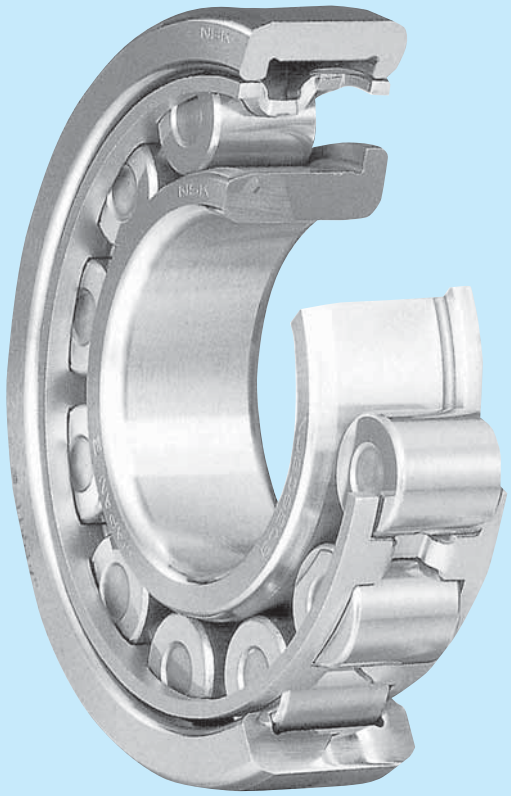

CYLINDRICAL ROLLER BEARINGS

SINGLE-ROW CYLINDRICAL ROLLER BEARINGS	Bore Diameter 20 – 65mm	B 88
	Bore Diameter 70 – 160mm	B 94
	Bore Diameter 170 – 500mm	B102
L-SHAPED THRUST COLLARS FOR CYLINDRICAL ROLLER BEARINGS	Bore Diameter 20 – 320mm	B106
DOUBLE-ROW CYLINDRICAL ROLLER BEARINGS	Bore Diameter 25 – 360mm	B110

Four-Row Cylindrical Roller Bearings are described on Pages B334 to B343.

DESIGN, TYPES, AND FEATURES

Depending on the existence of ribs on their rings, Cylindrical Roller Bearings are classified into the following types.

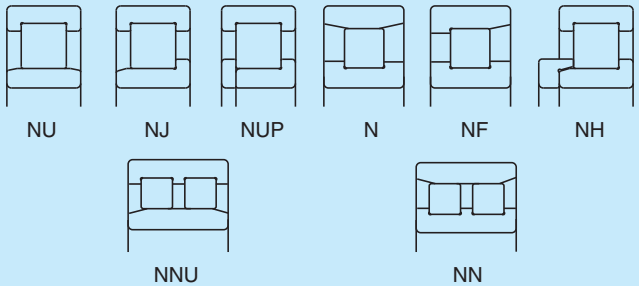

Types NU, N, NNU, and NN are suitable as free-end bearings. Types NJ and NF can sustain limited axial loads in one direction. Types NH and NUP can be used as fixed-end bearings.

NH-type cylindrical roller bearings consist of the NJ-type cylindrical roller bearings and HJ-type L-shaped thrust collars (See Page B104 to B105).

The inner ring loose rib of a NUP-type cylindrical roller bearing should be mounted so that the marked side is on the outside.

Use pressed, machined, or molded cages for standard cylindrical roller bearings as shown in Table 1.

Table 1 Standard Cages for Cylindrical Roller Bearings

Series	Pressed Steel Cages (W)	Machined Brass Cages (M)	Molded Polyamide Cages (T)
NU10**	—	1005 – 10/500	—
N2**	204 – 230	232 – 264	—
NU2**	214 – 230	232 – 264	—
NU2**E	205E – 213E	214E – 240E	204E
NU22**	2204 – 2230	2232 – 2252	—
NU22**E	—	2222E – 2240E	2204E – 2220E
N3**	304 – 324	326 – 352	—
NU3**	312 – 330	332 – 352	—
NU3**E	305E – 311E	312E – 340E	304E
NU23**	2304 – 2320	2322 – 2340	—
NU23**E	—	2322E – 2340E	2304E – 2320E
NU4**	405 – 416	417 – 430	—

The basic load ratings listed in the bearing tables are based on the Cage Classification in Table 1.

For a given bearing number, if the type of cage is not the standard one, the number of rollers may vary; in such a case, the load rating will differ from the one listed in the bearing tables.

Among the NN Type of double-row bearings, there are many of high precision that have tapered bores, and they are primarily used in the main spindles of machine tools. Their cages are either molded polyphenylenesulfide (PPS) or machined brass.

PRECAUTIONS FOR USE OF CYLINDRICAL ROLLER BEARINGS

If the load on cylindrical roller bearings becomes too small during operation, slippage between the rollers and raceways occurs, which may result in smearing. Especially with large bearings since the weight of the roller and cage is high.

In case of strong shock loads or vibration, pressed-steel cages are sometimes inadequate.

If very small bearing load or strong shock loads or vibration are expected, please consult with NSK for selection of the bearings.

Bearings with molded polyamide cages (ET type) can be used continuously at temperatures between −40 and 120°C. If the bearings are used in gear oil, nonflammable hydraulic oil, or ester oil at a high temperature over 100°C, please contact NSK beforehand.

TOLERANCES AND RUNNING ACCURACY

CYLINDRICAL ROLLER BEARINGS ..... Table 8.2 (Pages A60 to A63)

DOUBLE-ROW CYLINDRICAL ROLLER BEARINGS ..... Table 8.2 (Pages A60 to A63)

Table 2 Tolerances for Roller Inscribed Circle Diameter F_w and Roller Circumscribed Circle Diameter E_w of Cylindrical Roller Bearings Having Interchangeable Rings

Units : μm

Nominal Bore Diameter d (mm)		Tolerances for F_w of types NU, NJ, NUP, NH, and NNU ΔF_w		Tolerances for E_w of types N, NF, and NN ΔE_w	
over	incl.	high	low	high	low
—	20	+10	0	0	−10
20	50	+15	0	0	−15
50	120	+20	0	0	−20
120	200	+25	0	0	−25
200	250	+30	0	0	−30
250	315	+35	0	0	−35
315	400	+40	0	0	−40
400	500	+45	0	—	—

RECOMMENDED FITS

CYLINDRICAL ROLLER BEARINGS ..... Table 9.2 (Page A84)
Table 9.4 (Page A85)

DOUBLE-ROW CYLINDRICAL ROLLER BEARINGS ..... Table 9.2 (Page A84)
Table 9.4 (Page A85)

INTERNAL CLEARANCES

CYLINDRICAL ROLLER BEARINGS ..... Table 9.14 (Page A91)
DOUBLE-ROW CYLINDRICAL ROLLER BEARINGS .... Table 9.14 (Page A91)

PERMISSIBLE MISALIGNMENT

The permissible misalignment of cylindrical roller bearings varies depending on the type and internal specifications, but under normal loads, the angles are approximately as follows:

Cylindrical Roller Bearings of width series 0 or 1 ..... 0.0012 radian (4′)
Cylindrical Roller Bearings of width series 2 ..... 0.0006 radian (2′)

For double-row cylindrical roller bearings, nearly no misalignment is allowed.

LIMITING SPEEDS

The limiting speeds listed in the bearing tables should be adjusted depending on the bearing load conditions. Also, higher speeds are attainable by making changes in the lubrication method, cage design, etc. Refer to Page A37 for detailed information.

Bore Diameter 20 – 35 mm

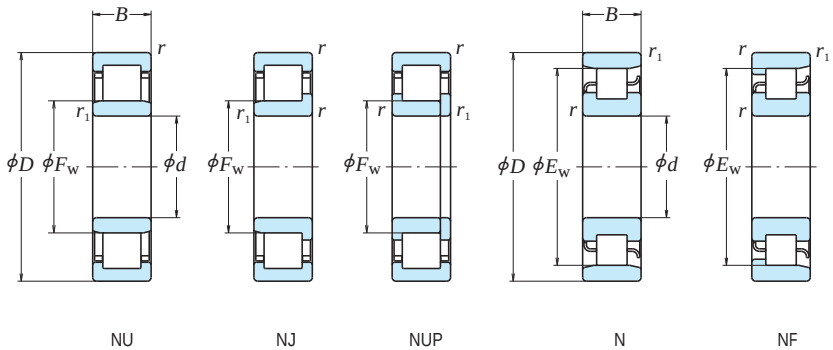

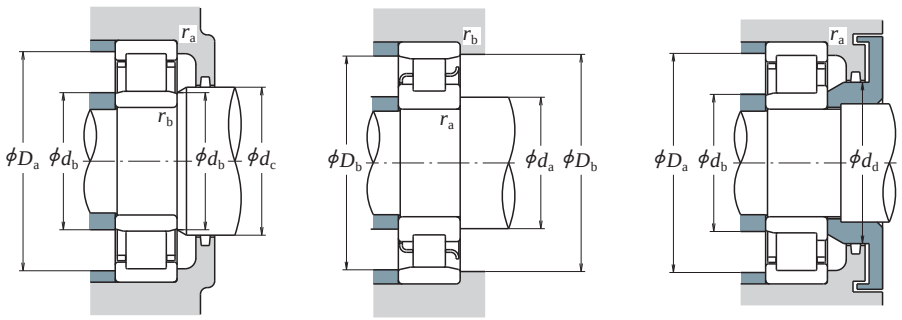

d	Boundary Dimensions (mm) D	B	r min.	r1 min.	Fw	Ew	Basic Load Ratings (N) Cr	C0r	Limiting Speeds(1) (min⁻¹) Grease	Oil
20	47	14	1	0.6	—	40	15 400	12 700	15 000	18 000
	47	14	1	0.6	26.5	—	25 700	22 600	13 000	16 000
	47	18	1	0.6	27	—	20 700	18 400	13 000	16 000
	47	18	1	0.6	26.5	—	30 500	28 300	13 000	16 000
	52	15	1.1	0.6	—	44.5	21 400	17 300	12 000	15 000
	52	15	1.1	0.6	27.5	—	31 500	26 900	12 000	15 000
	52	21	1.1	0.6	28.5	—	30 500	27 200	11 000	14 000
	52	21	1.1	0.6	27.5	—	42 000	39 000	11 000	14 000
25	47	12	0.6	0.3	30.5	—	14 300	13 100	15 000	18 000
	52	15	1	0.6	—	45	17 700	15 700	13 000	16 000
	52	15	1	0.6	31.5	—	29 300	27 700	12 000	14 000
	52	18	1	0.6	31.5	—	35 000	34 500	12 000	14 000
	62	17	1.1	1.1	—	53	29 300	25 200	10 000	13 000
	62	17	1.1	1.1	34	—	41 500	37 500	10 000	12 000
	62	24	1.1	1.1	34	—	57 000	56 000	9 000	11 000
	80	21	1.5	1.5	38.8	62.8	46 500	40 000	9 000	11 000
30	55	13	1	0.6	36.5	48.5	19 700	19 600	12 000	15 000
	62	16	1	0.6	—	53.5	24 900	23 300	11 000	13 000
	62	16	1	0.6	37.5	—	39 000	37 500	9 500	12 000
	62	20	1	0.6	37.5	—	49 000	50 000	9 500	12 000
	72	19	1.1	1.1	—	62	38 500	35 000	8 500	11 000
	72	19	1.1	1.1	40.5	—	53 000	50 000	8 500	10 000
	72	27	1.1	1.1	40.5	—	74 500	77 500	8 000	9 500
	90	23	1.5	1.5	45	73	62 500	55 000	7 500	9 500
35	62	14	1	0.6	42	55	22 600	23 200	11 000	13 000
	72	17	1.1	0.6	—	61.8	35 500	34 000	9 500	11 000
	72	17	1.1	0.6	44	—	50 500	50 000	8 500	10 000
	72	23	1.1	0.6	44	—	61 500	65 500	8 500	10 000
	80	21	1.5	1.1	—	68.2	49 500	47 000	8 000	9 500
	80	21	1.5	1.1	46.2	—	66 500	65 500	7 500	9 500
	80	31	1.5	1.1	46.2	—	93 000	101 000	6 700	8 500
	100	25	1.5	1.5	53	83	75 500	69 000	6 700	8 000

Notes (1) The limiting speeds listed above apply to bearings with machined cages (No suffix). For bearings with pressed cages, reduce the limiting speed by 20%. (Not applicable to bearing numbers with an EM, EW, or ET suffix.)

(2) The bearings with suffix ET have polyamide cage. The maximum operating temperature should be less than 120 ℃.

Bearing Numbers(2)	NU	NJ (3)	NUP	N	NF	Abutment and Fillet Dimensions (mm) da(4) min.	db min.	db(5) max.	dc min.	dd min.	Da(4) max.	Db max.	Db min.	ra max.	rb max.	Mass (kg) approx.
N 204	—	—	—	**N**	**NF**	25	—	—	—	—	—	43	42	1	0.6	0.107
NU 204 ET	**NU**	**NJ**	**NUP**	—	—	25	24	25	29	32	42	—	—	1	0.6	0.107
NU2204	**NU**	**NJ**	—	—	—	25	24	25	29	32	42	—	—	1	0.6	0.144
NU2204 ET	**NU**	**NJ**	**NUP**	—	—	25	24	25	29	32	42	—	—	1	0.6	0.138
N 304	—	—	—	**N**	**NF**	26.5	—	—	—	—	—	48	46	1	0.6	0.148
NU 304 ET	**NU**	**NJ**	**NUP**	—	—	26.5	24	26	30	33	45.5	—	—	1	0.6	0.145
NU2304	**NU**	**NJ**	**NUP**	—	—	26.5	24	27	30	33	45.5	—	—	1	0.6	0.217
NU2304 ET	**NU**	**NJ**	**NUP**	—	—	26.5	24	26	30	33	45.5	—	—	1	0.6	0.209
NU1005	**NU**	—	—	—	—	—	27	30	32	—	43	—	—	0.6	0.3	0.094
N 205	—	—	—	**N**	**NF**	30	—	—	—	—	—	48	46	1	0.6	0.135
NU 205 EW	**NU**	**NJ**	**NUP**	—	—	30	29	30	34	37	47	—	—	1	0.6	0.136
NU2205 ET	**NU**	**NJ**	**NUP**	—	—	30	29	30	34	37	47	—	—	1	0.6	0.16
N 305	—	—	—	**N**	**NF**	31.5	—	—	—	—	—	55.5	50	1	1	0.233
NU 305 EW	**NU**	**NJ**	**NUP**	—	—	31.5	31.5	32	37	40	55.5	—	—	1	1	0.269
NU2305 ET	**NU**	**NJ**	**NUP**	—	—	31.5	31.5	32	37	40	55.5	—	—	1	1	0.338
NU 405	**NU**	**NJ**	—	**N**	**NF**	33	33	37	41	46	72	72	64	1.5	1.5	0.57
NU1006	**NU**	—	—	**N**	—	35	34	36	38	—	50	51	49	1	0.5	0.136
N 206	—	—	—	**N**	**NF**	35	—	—	—	—	—	58	56	1	0.6	0.208
NU 206 EW	**NU**	**NJ**	**NUP**	—	—	35	34	36	40	44	57	—	—	1	0.6	0.205
NU2206 ET	**NU**	**NJ**	**NUP**	—	—	35	34	36	40	44	57	—	—	1	0.6	0.255
N 306	—	—	—	**N**	**NF**	36.5	—	—	—	—	—	65.5	64	1	1	0.353
NU 306 EW	**NU**	**NJ**	**NUP**	—	—	36.5	36.5	39	44	48	65.5	—	—	1	1	0.409
NU2306 ET	**NU**	**NJ**	**NUP**	—	—	36.5	36.5	39	44	48	65.5	—	—	1	1	0.518
NU 406	**NU**	**NJ**	—	**N**	**NF**	38	38	43	47	52	82	82	75	1.5	1.5	0.758
NU1007	**NU**	**NJ**	—	**N**	—	40	39	41	44	—	57	58	56	1	0.5	0.18
N 207	—	—	—	**N**	**NF**	41.5	—	—	—	—	—	68	64	1	0.6	0.301
NU 207 EW	**NU**	**NJ**	**NUP**	—	—	41.5	39	42	46	50	65.5	—	—	1	0.6	0.304
NU2207 ET	**NU**	**NJ**	**NUP**	—	—	41.5	39	42	46	50	65.5	—	—	1	0.6	0.40
N 307	—	—	—	**N**	**NF**	43	—	—	—	—	—	73.5	70	1.5	1	0.476
NU 307 EW	**NU**	**NJ**	**NUP**	—	—	41.5	41.5	44	48	53	72	—	—	1.5	1	0.545
NU2307 ET	**NU**	**NJ**	**NUP**	—	—	43	41.5	44	48	53	72	—	—	1.5	1	0.711
NU 407	**NU**	**NJ**	—	**N**	**NF**	43	43	51	55	61	92	92	85	1.5	1.5	1.01

Notes (3) When L-shaped thrust collars (See section for L-Shaped Thrust Collars starting on page **B104**) are used, the bearings become the NH type.

(4) If axial loads are applied, increase d_a and reduce D_a from the values listed above.

(5) d_b (max.) are values for adjusting rings for NU, NJ Types.

Bore Diameter 40 – 55 mm

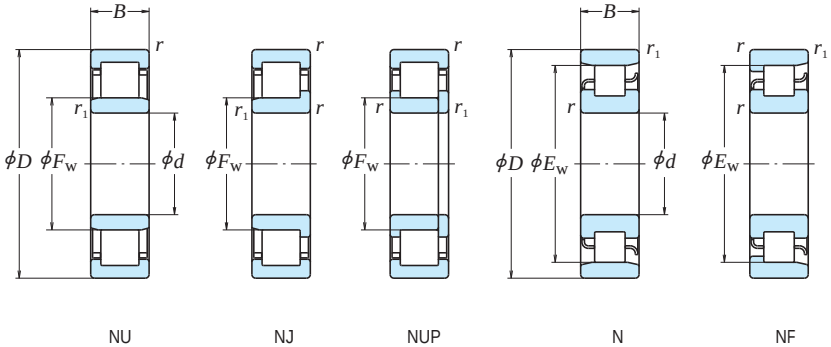

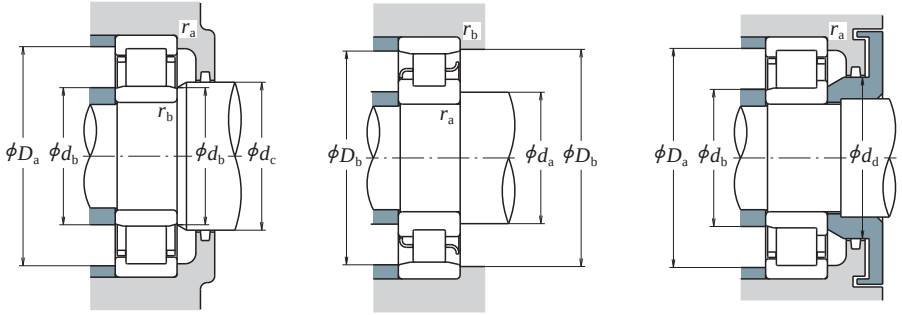

d	Boundary Dimensions (mm) D	B	r min.	r1 min.	Fw	Ew	Basic Load Ratings (N) Cr	C0r	Limiting Speeds(1) (min⁻¹) Grease	Oil	Bearing Numbers(2) NU	NJ (3)	NUP	N	NF	Abutment and Fillet Dimensions (mm) da(4) min.	db min.	db(5) max.	dc min.	dd min.	Da(4) max.	Db max.	Db min.	ra max.	rb max.	Mass (kg) approx.
40	68	15	1	0.6	47	61	27 300	29 000	10 000	12 000	**NU1008**	**NU**	**NJ**	**NUP**	**N**	—	45	44	46	49	—	63	64	62	1	0.6	0.223
	80	18	1.1	1.1	—	70	43 500	43 000	8 500	10 000	**N 208**	—	—	—	**N**	**NF**	46.5	—	—	—	—	—	73.5	72	1	1	0.375
	80	18	1.1	1.1	49.5	—	55 500	55 500	7 500	9 000	**NU 208 EW**	**NU**	**NJ**	**NUP**	—	—	46.5	46.5	48	52	56	73.5	—	—	1	1	0.379
	80	23	1.1	1.1	49.5	—	72 500	77 500	7 500	9 000	**NU2208 ET**	**NU**	**NJ**	**NUP**	—	—	46.5	46.5	48	52	56	73.5	—	—	1	1	0.480
	90	23	1.5	1.5	—	77.5	58 500	57 000	6 700	8 500	**N 308**	—	—	—	**N**	**NF**	48	—	—	—	—	—	82	79	1.5	1.5	0.649
	90	23	1.5	1.5	52	—	83 000	81 500	6 700	8 000	**NU 308 EW**	**NU**	**NJ**	**NUP**	—	—	48	48	50	55	60	82	—	—	1.5	1.5	0.747
	90	33	1.5	1.5	52	—	114 000	122 000	6 000	7 500	**NU2308 ET**	**NU**	**NJ**	**NUP**	—	—	48	48	50	55	60	82	—	—	1.5	1.5	0.933
	110	27	2	2	58	92	95 500	89 000	6 000	7 500	**NU 408**	**NU**	**NJ**	**NUP**	**N**	**NF**	49	49	56	60	67	101	101	94	2	2	1.28
45	75	16	1	0.6	52.5	67.5	32 500	35 500	9 000	11 000	**NU1009**	**NU**	—	—	**N**	**NF**	50	49	51	54	—	70	71	68	1	0.6	0.279
	85	19	1.1	1.1	—	75	46 000	47 000	7 500	9 000	**N 209**	—	—	—	**N**	**NF**	51.5	—	—	—	—	—	78.5	77	1	1	0.429
	85	19	1.1	1.1	54.5	—	63 000	66 500	6 700	8 000	**NU 209 EW**	**NU**	**NJ**	**NUP**	—	—	51.5	51.5	52	57	61	78.5	—	—	1	1	0.438
	85	23	1.1	1.1	54.5	—	76 000	84 500	6 700	8 500	**NU2209 ET**	**NU**	**NJ**	**NUP**	—	—	51.5	51.5	52	57	61	78.5	—	—	1	1	0.521
	100	25	1.5	1.5	—	86.5	79 000	77 500	6 300	7 500	**N 309**	—	—	—	**N**	**NF**	53	—	—	—	—	—	92	77	1.5	1.5	0.869
	100	25	1.5	1.5	58.5	—	97 500	98 500	6 000	7 500	**NU 309 EW**	**NU**	**NJ**	**NUP**	—	—	53	53	56	60	66	92	—	—	1.5	1.5	1.01
	100	36	1.5	1.5	58.5	—	137 000	153 000	5 300	6 700	**NU2309 ET**	**NU**	**NJ**	**NUP**	—	—	53	53	56	60	66	92	—	—	1.5	1.5	1.28
	120	29	2	2	64.5	100.5	107 000	102 000	5 600	6 700	**NU 409**	**NU**	**NJ**	**NUP**	**N**	**NF**	54	54	62	66	74	111	111	103	2	2	1.62
50	80	16	1	0.6	57.5	72.5	32 000	36 000	8 000	10 000	**NU1010**	**NU**	**NJ**	**NUP**	**N**	—	55	54	56	59	—	75	76	73	1	0.6	0.301
	90	20	1.1	1.1	—	80.4	48 000	51 000	7 100	8 500	**N 210**	—	—	—	**N**	**NF**	56.5	—	—	—	—	—	83.5	82	1	1	0.483
	90	20	1.1	1.1	59.5	—	69 000	76 500	6 300	7 500	**NU 210 EW**	**NU**	**NJ**	**NUP**	—	—	56.5	56.5	57	62	67	83.5	—	—	1	1	0.50
	90	23	1.1	1.1	59.5	—	83 500	97 000	6 300	8 000	**NU2210 ET**	**NU**	**NJ**	**NUP**	—	—	56.5	56.5	57	62	67	83.5	—	—	1	1	0.562
	110	27	2	2	—	95	87 000	86 000	5 600	6 700	**N 310**	—	—	—	**N**	**NF**	59	—	—	—	—	—	101	97	2	2	1.11
	110	27	2	2	65	—	110 000	113 000	5 000	6 000	**NU 310 EW**	**NU**	**NJ**	**NUP**	—	—	59	59	63	67	73	101	—	—	2	2	1.3
	110	40	2	2	65	—	163 000	187 000	5 000	6 300	**NU2310 ET**	**NU**	**NJ**	**NUP**	—	—	59	59	63	67	73	101	—	—	2	2	1.7
	130	31	2.1	2.1	—	110.8	139 000	136 000	5 000	6 000	**N 410**	—	—	—	**N**	**NF**	65	—	—	—	—	—	117	113	2	2	2.0
	130	31	2.1	2.1	70.8	110.8	129 000	124 000	5 000	6 000	**NU 410**	**NU**	**NJ**	**NUP**	**N**	**NF**	61	61	68	73	81	119	119	113.3	2	2	1.99
55	90	18	1.1	1	64.5	80.5	37 500	44 000	7 500	9 000	**NU1011**	**NU**	**NJ**	—	**N**	—	61.5	60	63	66	—	83.5	85	82	1	1	0.445
	100	21	1.5	1.1	—	88.5	58 000	62 500	6 300	7 500	**N 211**	—	—	—	**N**	**NF**	63	—	—	—	—	—	93.5	91	1.5	1	0.634
	100	21	1.5	1.1	66	—	86 500	98 500	5 600	7 100	**NU 211 EW**	**NU**	**NJ**	**NUP**	—	—	63	61.5	64	68	73	92	—	—	1.5	1	0.669
	100	25	1.5	1.1	66	—	101 000	122 000	5 600	7 100	**NU2211 ET**	**NU**	**NJ**	**NUP**	—	—	63	61.5	64	68	73	92	—	—	1.5	1	0.783
	120	29	2	2	—	104.5	111 000	111 000	5 000	6 300	**N 311**	—	—	—	**N**	**NF**	64	—	—	—	—	—	111	107	2	2	1.42
	120	29	2	2	70.5	—	137 000	143 000	4 500	5 600	**NU 311 EW**	**NU**	**NJ**	**NUP**	—	—	64	64	68	72	80	111	—	—	2	2	1.64
	120	43	2	2	70.5	—	201 000	233 000	4 500	5 600	**NU2311 ET**	**NU**	**NJ**	**NUP**	—	—	64	64	68	72	80	111	—	—	2	2	2.18
	140	33	2.1	2.1	77.2	117.2	139 000	138 000	4 500	5 600	**NU 411**	**NU**	**NJ**	**NUP**	**N**	**NF**	66	66	75	79	87	129	129	119	2	2	2.5

Notes (1) The limiting speeds listed above apply to bearings with machined cages (No suffix). For bearings with pressed cages, reduce the limiting speed by 20%. (Not applicable to bearing numbers with an EM, EW, or ET suffix.)

(2) The bearings with suffix ET have polyamide cage. The maximum operating temperature should be less than 120 ℃.

(3) When L-shaped thrust collars (See section for L-Shaped Thrust Collars starting on page **B104**) are used, the bearings become the NH type.

(4) If axial loads are applied, increase d_a and reduce D_a from the values listed above.

(5) d_b (max.) are values for adjusting rings for NU, NJ Types.

Bore Diameter 60 – 75 mm

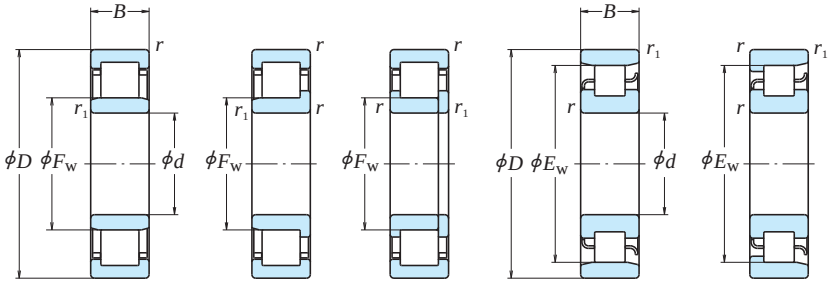

NU NJ NUP N NF

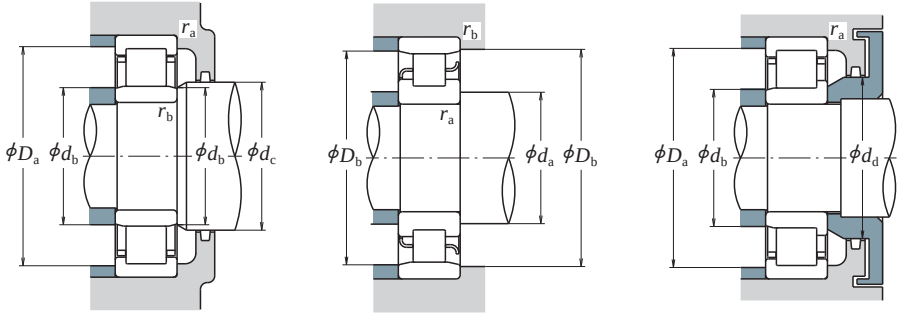

d	Boundary Dimensions (mm) D	B	r min.	r1 min.	Fw	Ew	Basic Load Ratings (N) Cr	C0r	Limiting Speeds(1) (min⁻¹) Grease	Oil	Bearing Numbers(2) NU	NJ (3)	NUP	N	NF	Abutment and Fillet Dimensions (mm) da(4) min.	db min.	db(5) max.	dc min.	dd min.	Da(4) max.	Db max.	Db min.	ra max.	rb max.	Mass (kg) approx.
60	95	18	1.1	1	69.5	85.5	40 000	48 500	6 700	8 500	**NU1012**	**NU**	**NJ**	—	**N**	**NF**	66.5	65	68	71	—	88.5	90	87	1	1	0.474
	110	22	1.5	1.5	—	97.5	68 500	75 000	6 000	7 100	**N 212**	—	—	—	**N**	**NF**	68	—	—	—	—	—	102	100	1.5	1.5	0.823
	110	22	1.5	1.5	72	—	97 500	107 000	5 300	6 300	**NU 212 EW**	**NU**	**NJ**	**NUP**	—	—	68	68	70	75	80	102	—	—	1.5	1.5	0.824
	110	28	1.5	1.5	72	—	131 000	157 000	5 300	6 300	**NU2212 ET**	**NU**	**NJ**	**NUP**	—	—	68	68	70	75	80	102	—	—	1.5	1.5	1.06
	130	31	2.1	2.1	—	113	124 000	126 000	4 800	5 600	**N 312**	—	—	—	**N**	**NF**	71	—	—	—	—	—	119	115	2	2	1.78
	130	31	2.1	2.1	77	—	124 000	126 000	4 800	5 600	**NU 312**	**NU**	**NJ**	**NUP**	—	—	71	71	75	79	86	119	—	—	2	2	1.82
	130	31	2.1	2.1	77	—	150 000	157 000	4 800	5 600	**NU 312 EM**	**NU**	**NJ**	**NUP**	—	—	71	71	75	79	86	119	—	—	2	2	2.06
	130	46	2.1	2.1	77	—	222 000	262 000	4 300	5 300	**NU2312 ET**	**NU**	**NJ**	**NUP**	—	—	71	71	75	79	86	119	—	—	2	2	2.7
	150	35	2.1	2.1	83	127	167 000	168 000	4 300	5 300	**NU 412**	**NU**	**NJ**	**NUP**	**N**	**NF**	71	71	80	85	94	139	139	130	2	2	3.04
65	100	18	1.1	1	74.5	90.5	41 000	51 000	6 300	8 000	**NU1013**	**NU**	**NJ**	—	**N**	**NF**	71.5	70	73	76	—	93.5	95	92	1	1	0.504
	120	23	1.5	1.5	—	105.6	84 000	94 500	5 300	6 300	**N 213**	—	—	—	**N**	**NF**	73	—	—	—	—	—	112	108	1.5	1.5	1.05
	120	23	1.5	1.5	78.5	—	108 000	119 000	4 800	5 600	**NU 213 EW**	**NU**	**NJ**	**NUP**	—	—	73	73	76	81	87	112	—	—	1.5	1.5	1.05
	120	31	1.5	1.5	78.5	—	149 000	181 000	4 800	6 000	**NU2213 ET**	**NU**	**NJ**	**NUP**	—	—	73	73	76	81	87	112	—	—	1.5	1.5	1.41
	140	33	2.1	2.1	—	121.5	135 000	139 000	4 300	5 300	**N 313**	—	—	—	**N**	**NF**	76	—	—	—	—	—	129	125	2	2	2.17
	140	33	2.1	2.1	83.5	—	135 000	139 000	4 300	5 300	**NU 313**	**NU**	**NJ**	**NUP**	—	—	76	76	81	85	93	129	—	—	2	2	2.23
	140	33	2.1	2.1	82.5	—	181 000	191 000	4 300	5 300	**NU 313 EM**	**NU**	**NJ**	**NUP**	—	—	76	76	80	85	93	129	—	—	2	2	2.56
	140	48	2.1	2.1	82.5	—	233 000	265 000	3 800	4 800	**NU2313 ET**	**NU**	**NJ**	**NUP**	—	—	76	76	80	85	93	129	—	—	2	2	3.16
	160	37	2.1	2.1	89.3	135.3	182 000	186 000	4 000	4 800	**NU 413**	**NU**	**NJ**	—	**N**	**NF**	76	76	86	91	100	149	149	138.8	2	2	3.63
70	110	20	1.1	1	80	100	58 500	70 500	6 000	7 100	**NU1014**	**NU**	**NJ**	**NUP**	**N**	**NF**	76.5	75	79	82	—	103.5	105	101	1	1	0.693
	125	24	1.5	1.5	—	110.5	83 500	95 000	5 000	6 300	**N 214**	—	—	—	**N**	**NF**	78	—	—	—	—	—	117	113	1.5	1.5	1.14
	125	24	1.5	1.5	83.5	—	119 000	137 000	5 000	6 300	**NU 214 EM**	**NU**	**NJ**	**NUP**	—	—	78	78	81	86	92	117	—	—	1.5	1.5	1.29
	125	31	1.5	1.5	83.5	—	156 000	194 000	4 500	5 600	**NU2214 ET**	**NU**	**NJ**	**NUP**	—	—	78	78	81	86	92	117	—	—	1.5	1.5	1.49
	150	35	2.1	2.1	—	130	149 000	156 000	4 000	5 000	**N 314**	—	—	—	**N**	**NF**	81	—	—	—	—	—	139	133.5	2	2	2.67
	150	35	2.1	2.1	90	—	158 000	168 000	4 000	5 000	**NU 314**	**NU**	**NJ**	**NUP**	—	—	81	81	87	92	100	139	—	—	2	2	2.75
	150	35	2.1	2.1	89	—	205 000	222 000	4 000	5 000	**NU 314 EM**	**NU**	**NJ**	**NUP**	—	—	81	81	86	92	100	139	—	—	2	2	3.09
	150	51	2.1	2.1	89	—	274 000	325 000	3 600	4 500	**NU2314 ET**	**NU**	**NJ**	**NUP**	—	—	81	81	86	92	100	139	—	—	2	2	3.92
	180	42	3	3	100	152	228 000	236 000	3 600	4 300	**NU 414**	**NU**	**NJ**	**NUP**	**N**	**NF**	83	83	97	102	112	167	167	155	2.5	2.5	5.28
75	115	20	1.1	1	85	105	60 000	74 500	5 600	6 700	**NU1015**	**NU**	—	—	**N**	**NF**	81.5	80	83	87	—	108.5	110	106	1	1	0.731
	130	25	1.5	1.5	—	116.5	96 500	111 000	4 800	6 000	**N 215**	—	—	—	**N**	**NF**	83	—	—	—	—	—	122	119	1.5	1.5	1.23
	130	25	1.5	1.5	88.5	—	130 000	156 000	4 800	6 000	**NU 215 EM**	**NU**	**NJ**	**NUP**	—	—	83	83	86	90	96	122	—	—	1.5	1.5	1.44
	130	31	1.5	1.5	88.5	—	162 000	207 000	4 300	5 300	**NU2215 ET**	**NU**	**NJ**	**NUP**	—	—	83	83	86	90	96	122	—	—	1.5	1.5	1.57
	160	37	2.1	2.1	—	139.5	179 000	189 000	3 800	4 800	**N 315**	—	—	—	**N**	**NF**	86	—	—	—	—	—	149	143	2	2	3.2
	160	37	2.1	2.1	95.5	—	179 000	189 000	3 800	4 800	**NU 315**	**NU**	**NJ**	**NUP**	—	—	86	86	93	97	106	149	—	—	2	2	3.26
	160	37	2.1	2.1	95	—	240 000	263 000	3 800	4 800	**NU 315 EM**	**NU**	**NJ**	**NUP**	—	—	86	86	92	97	106	149	—	—	2	2	3.73
	160	55	2.1	2.1	95	—	330 000	395 000	3 400	4 300	**NU2315 ET**	**NU**	**NJ**	**NUP**	—	—	86	86	92	97	106	149	—	—	2	2	4.86
	190	45	3	3	104.5	160.5	262 000	274 000	3 400	4 000	**NU 415**	**NU**	**NJ**	—	**N**	**NF**	88	88	102	107	118	177	177	164	2.5	2.5	6.27

Notes (1) The limiting speeds listed above apply to bearings with machined cages (No suffix). For bearings with pressed cages, reduce the limiting speed by 20%. (Not applicable to bearing numbers with an EM, EW, or ET suffix.)

(2) The bearings with suffix ET have polyamide cage. The maximum operating temperature should be less than 120 ℃.

(3) When L-shaped thrust collars (See section for L-Shaped Thrust Collars starting on page **B104**) are used, the bearings become the NH type.

(4) If axial loads are applied, increase d_a and reduce D_a from the values listed above.

(5) d_b (max.) are values for adjusting rings for NU, NJ Types.

Bore Diameter 80 – 95 mm

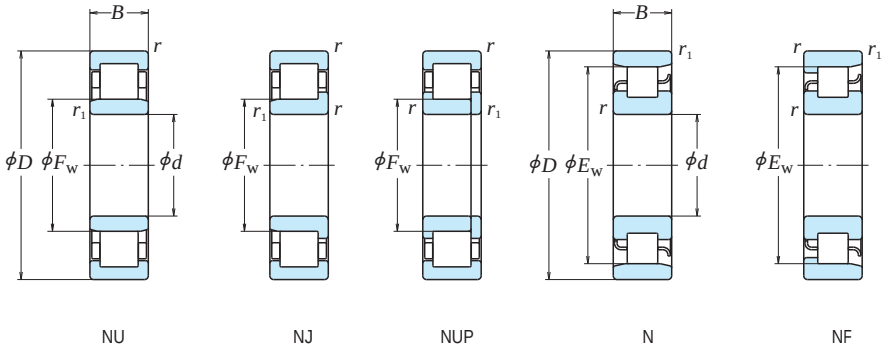

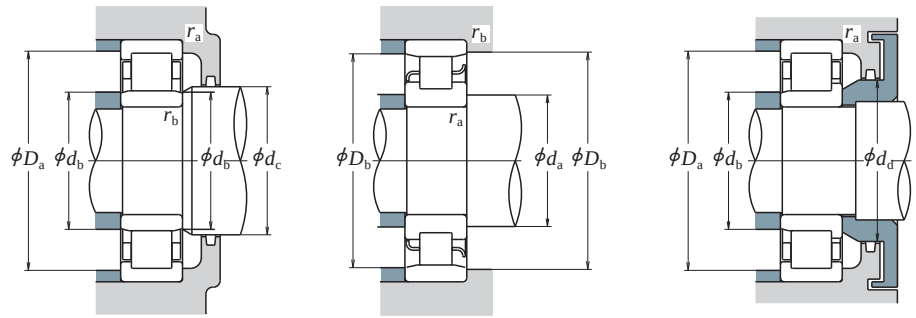

d	D	B	r min.	r1 min.	Fw	Ew	Cr	C0r	Grease	Oil	Bearing Numbers(2) NU	NJ (3)	NUP	N	NF	da(4) min.	db min.	db(5) max.	dc min.	dd min.	Da(4) max.	Db max.	Db min.	ra max.	rb max.	Mass (kg) approx.
80	125	22	1.1	1	91.5	113.5	72 500	90 500	5 300	6 300	NU1016	NU	—	NUP	N	—	86.5	85	90	94	—	118.5	120	115	1	1	0.969
	140	26	2	2	—	125.3	106 000	122 000	4 500	5 300	N 216	—	—	—	N	NF	89	—	—	—	—	—	131	128	2	2	1.47
	140	26	2	2	95.3	—	139 000	167 000	4 500	5 300	NU 216 EM	NU	NJ	NUP	—	—	89	89	92	97	104	131	—	—	2	2	1.7
	140	33	2	2	95.3	—	186 000	243 000	4 000	5 000	NU2216 ET	NU	NJ	NUP	—	—	89	89	92	97	104	131	—	—	2	2	1.96
	170	39	2.1	2.1	—	147	190 000	207 000	3 600	4 300	N 316	—	—	—	N	NF	91	—	—	—	—	—	159	150	2	2	3.85
	170	39	2.1	2.1	101	—	256 000	282 000	3 600	4 300	NU 316 EM	NU	NJ	NUP	—	—	91	91	98	105	114	159	—	—	2	2	4.45
	170	58	2.1	2.1	101	—	355 000	430 000	3 200	4 000	NU2316 ET	NU	NJ	NUP	—	—	91	91	98	105	114	159	—	—	2	2	5.73
	200	48	3	3	110	170	299 000	315 000	3 200	3 800	NU 416	NU	NJ	—	N	NF	93	93	107	112	124	187	187	173	2.5	2.5	7.36
85	130	22	1.1	1	96.5	118.5	74 500	95 500	5 000	6 000	NU1017	NU	—	—	N	—	91.5	90	95	99	—	123.5	125	120	1	1	1.01
	150	28	2	2	—	133.8	120 000	140 000	4 300	5 000	N 217	—	—	—	N	NF	94	—	—	—	—	—	141	137	2	2	1.87
	150	28	2	2	100.5	—	167 000	199 000	4 300	5 000	NU 217 EM	NU	NJ	NUP	—	—	94	94	98	104	110	141	—	—	2	2	2.11
	150	36	2	2	100.5	—	217 000	279 000	3 800	4 500	NU2217 ET	NU	NJ	NUP	—	—	94	94	98	104	110	141	—	—	2	2	2.44
	180	41	3	3	—	156	225 000	247 000	3 400	4 000	N 317	—	—	—	N	NF	98	—	—	—	—	—	167	159	2.5	2.5	4.53
	180	41	3	3	108	—	212 000	228 000	3 400	4 000	NU 317	NU	NJ	NUP	—	—	98	98	105	110	119	167	—	—	2.5	2.5	4.6
	180	41	3	3	108	—	291 000	330 000	3 400	4 000	NU 317 EM	NU	NJ	NUP	—	—	98	98	105	110	119	167	—	—	2.5	2.5	5.26
	180	60	3	3	108	—	395 000	485 000	3 000	3 800	NU2317 ET	NU	NJ	NUP	—	—	98	98	105	110	119	167	—	—	2.5	2.5	6.77
	210	52	4	4	113	177	335 000	350 000	3 000	3 800	NU 417	NU	NJ	—	N	NF	101	101	110	115	128	194	194	180	3	3	9.56
90	140	24	1.5	1.1	103	127	88 000	114 000	4 500	5 600	NU1018	NU	—	NUP	N	—	98	96.5	101	106	—	132	133.5	129	1.5	1	1.35
	160	30	2	2	—	143	152 000	178 000	4 000	4 800	N 218	—	—	—	N	NF	99	—	—	—	—	—	151	146	2	2	2.31
	160	30	2	2	107	—	182 000	217 000	4 000	4 800	NU 218 EM	NU	NJ	NUP	—	—	99	99	104	109	116	151	—	—	2	2	2.6
	160	40	2	2	107	—	242 000	315 000	3 600	4 300	NU2218 ET	NU	NJ	NUP	—	—	99	99	104	109	116	151	—	—	2	2	3.11
	190	43	3	3	—	165	240 000	265 000	3 200	3 800	N 318	—	—	—	N	NF	103	—	—	—	—	—	177	168	2.5	2.5	5.31
	190	43	3	3	115	—	240 000	265 000	3 200	3 800	NU 318	NU	NJ	NUP	—	—	103	103	112	117	127	177	—	—	2.5	2.5	5.38
	190	43	3	3	113.5	—	315 000	355 000	3 200	3 800	NU 318 EM	NU	NJ	NUP	—	—	103	103	111	117	127	177	—	—	2.5	2.5	6.1
	190	64	3	3	113.5	—	435 000	535 000	2 800	3 400	NU2318 ET	NU	NJ	NUP	—	—	103	103	111	117	127	177	—	—	2.5	2.5	7.9
	225	54	4	4	123.5	191.5	375 000	400 000	2 800	3 400	NU 418	NU	NJ	—	N	NF	106	106	120	125	139	209	209	196	3	3	11.5
95	145	24	1.5	1.1	108	132	90 500	120 000	4 300	5 300	NU1019	NU	NJ	—	N	—	103	101.5	106	111	—	137	138.5	134	1.5	1	1.41
	170	32	2.1	2.1	—	151.5	166 000	196 000	3 800	4 500	N 219	—	—	—	N	NF	106	—	—	—	—	—	159	155	2	2	2.79
	170	32	2.1	2.1	112.5	—	220 000	265 000	3 800	4 500	NU 219 EM	NU	NJ	NUP	—	—	106	106	110	116	123	159	—	—	2	2	3.17
	170	43	2.1	2.1	112.5	—	286 000	370 000	3 400	4 000	NU2219 ET	NU	NJ	NUP	—	—	106	106	110	116	123	159	—	—	2	2	3.81
	200	45	3	3	—	173.5	259 000	289 000	3 000	3 600	N 319	—	—	—	N	NF	108	—	—	—	—	—	187	177	2.5	2.5	6.09
	200	45	3	3	121.5	—	259 000	289 000	3 000	3 600	NU 319	NU	NJ	NUP	—	—	108	108	118	124	134	187	—	—	2.5	2.5	6.23
	200	45	3	3	121.5	—	335 000	385 000	3 000	3 600	NU 319 EM	NU	NJ	NUP	—	—	108	108	118	124	134	187	—	—	2.5	2.5	7.13
	200	67	3	3	121.5	—	460 000	585 000	2 600	3 400	NU2319 ET	NU	NJ	NUP	—	—	108	108	118	124	134	187	—	—	2.5	2.5	9.21
	240	55	4	4	133.5	201.5	400 000	445 000	2 600	3 200	NU 419	NU	NJ	NUP	—	NF	111	111	130	136	149	224	224	206	3	3	13.6

Notes (1) The limiting speeds listed above apply to bearings with machined cages (No suffix). For bearings with pressed cages, reduce the limiting speed by 20%. (Not applicable to bearing numbers with an EM, EW, or ET suffix.)

(2) The bearings with suffix ET have polyamide cage. The maximum operating temperature should be less than 120 ℃.

(3) When L-shaped thrust collars (See section for L-Shaped Thrust Collars starting on page **B104**) are used, the bearings become the NH type.

(4) If axial loads are applied, increase d_a and reduce D_a from the values listed above.

(5) d_b (max.) are values for adjusting rings for NU, NJ Types.

Bore Diameter 100 – 120 mm

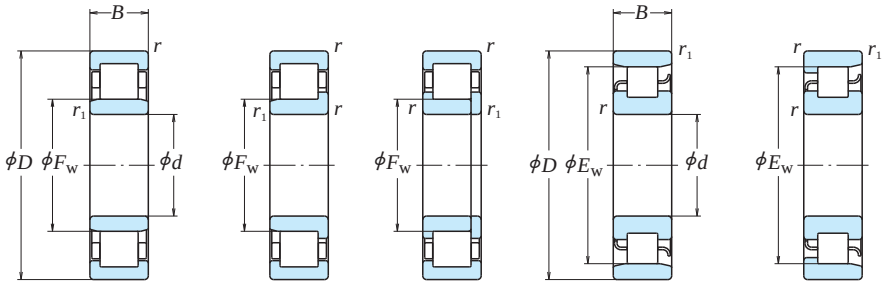

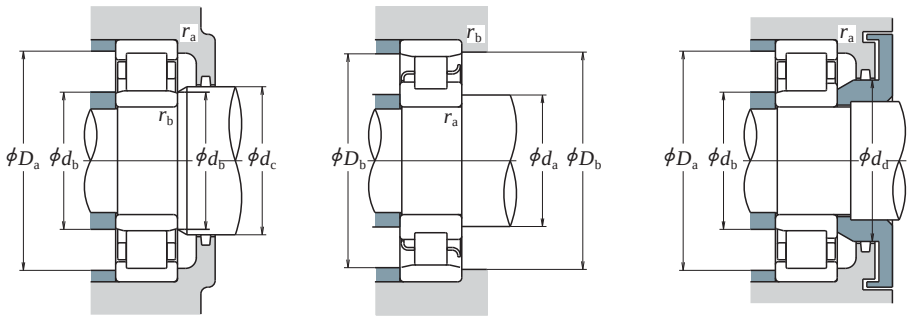

Boundary Dimensions (mm)							Basic Load Ratings (N)		Limiting Speeds(1) (min⁻¹)	
d	D	B	r min.	r_1 min.	F_w	E_w	C_r	C_{0r}	Grease	Oil
100	150	24	1.5	1.1	113	137	93 000	126 000	4 300	5 300
	180	34	2.1	2.1	—	160	183 000	217 000	3 600	4 300
	180	34	2.1	2.1	119	—	249 000	305 000	3 600	4 300
	180	46	2.1	2.1	119	—	335 000	445 000	3 200	3 800
	215	47	3	3	—	185.5	299 000	335 000	2 800	3 400
	215	47	3	3	129.5	—	299 000	335 000	2 800	3 400
	215	47	3	3	127.5	—	380 000	425 000	2 800	3 400
	215	73	3	3	127.5	—	570 000	715 000	2 400	3 000
	250	58	4	4	139	211	450 000	500 000	2 600	3 000
105	160	26	2	1.1	119.5	145.5	109 000	149 000	4 000	4 800
	190	36	2.1	2.1	—	168.8	201 000	241 000	3 400	4 000
	190	36	2.1	2.1	125	—	262 000	310 000	3 400	4 000
	225	49	3	3	—	195	340 000	390 000	2 600	3 200
	225	49	3	3	133	—	425 000	480 000	2 600	3 200
	260	60	4	4	144.5	220.5	495 000	555 000	2 400	3 000
110	170	28	2	1.1	125	155	131 000	174 000	3 800	4 500
	200	38	2.1	2.1	—	178.5	229 000	272 000	3 200	3 800
	200	38	2.1	2.1	132.5	—	293 000	365 000	3 200	3 800
	200	53	2.1	2.1	132.5	—	385 000	515 000	2 800	3 400
	240	50	3	3	—	207	380 000	435 000	2 600	3 000
	240	50	3	3	143	—	450 000	525 000	2 600	3 000
	280	65	4	4	155	—	550 000	620 000	2 200	2 800
120	180	28	2	1.1	135	165	139 000	191 000	3 400	4 300
	215	40	2.1	2.1	—	191.5	260 000	320 000	3 000	3 400
	215	40	2.1	2.1	143.5	—	335 000	420 000	3 000	3 400
	215	58	2.1	2.1	143.5	—	450 000	620 000	2 600	3 200
	260	55	3	3	—	226	450 000	510 000	2 200	2 800
	260	55	3	3	154	—	530 000	610 000	2 200	2 800
	260	86	3	3	154	—	795 000	1 030 000	2 000	2 600
	310	72	5	5	170	260	675 000	770 000	2 000	2 400

Notes (1) The limiting speeds listed above apply to bearings with machined cages (No suffix). For bearings with pressed cages, reduce the limiting speed by 20%. (Not applicable to bearing numbers with an EM, EW, or ET suffix.)

(2) The bearings with suffix ET have polyamide cage. The maximum operating temperature should be less than 120 ℃.

Bearing Numbers(2)						Abutment and Fillet Dimensions (mm)										Mass (kg)
	NU	NJ (3)	NUP	N	NF	d_a(4) min.	d_b min.	d_b(5) max.	d_c min.	d_d min.	D_a(4) max.	D_b max.	D_b min.	r_a max.	r_b max.	approx.
NU1020	**NU**	**NJ**	**NUP**	**N**	—	108	106.5	111	116	—	142	143.5	139	1.5	1	1.47
N 220	—	—	—	**N**	**NF**	111	—	—	—	—	—	169	163	2	2	3.36
NU 220 EM	**NU**	**NJ**	**NUP**	—	—	111	111	116	122	130	169	—	—	2	2	3.81
NU2220 ET	**NU**	**NJ**	**NUP**	—	—	111	111	116	122	130	169	—	—	2	2	4.69
N 320	—	—	—	**N**	**NF**	113	—	—	—	—	—	202	190	2.5	2.5	7.59
NU 320	**NU**	**NJ**	**NUP**	—	—	113	113	126	132	143	202	—	—	2.5	2.5	7.69
NU 320 EM	**NU**	**NJ**	**NUP**	—	—	113	113	124	132	143	202	—	—	2.5	2.5	8.63
NU2320 ET	**NU**	**NJ**	**NUP**	—	—	113	113	124	132	143	202	—	—	2.5	2.5	11.8
NU 420	**NU**	**NJ**	—	**N**	**NF**	116	116	135	141	156	234	234	215	3	3	15.5
NU1021	**NU**	—	—	**N**	**NF**	114	111.5	118	122	—	151	153.5	147	2	1	1.83
N 221	—	—	—	**N**	**NF**	116	—	—	—	—	—	179	172	2	2	4.0
NU 221 EM	**NU**	**NJ**	**NUP**	—	—	116	116	121	129	137	179	—	—	2	2	4.58
N 321	—	—	—	**N**	**NF**	118	—	—	—	—	—	212	199	2.5	2.5	8.69
NU 321 EM	**NU**	**NJ**	**NUP**	—	—	118	118	131	137	149	212	—	—	2.5	2.5	9.84
NU 421	**NU**	**NJ**	—	**N**	**NF**	121	121	141	147	162	244	244	225	3	3	17.3
NU1022	**NU**	**NJ**	—	**N**	**NF**	119	116.5	123	128	—	161	163.5	157	2	1	2.27
N 222	—	—	—	**N**	**NF**	121	—	—	—	—	—	189	182	2	2	4.64
NU 222 EM	**NU**	**NJ**	**NUP**	—	—	121	121	129	135	144	189	—	—	2	2	5.37
NU2222 EM	**NU**	**NJ**	**NUP**	—	—	121	121	129	135	144	189	—	—	2	2	7.65
N 322	—	—	—	**N**	**NF**	123	—	—	—	—	—	227	211	2.5	2.5	10.3
NU 322 EM	**NU**	**NJ**	**NUP**	—	—	123	123	139	145	158	227	—	—	2.5	2.5	11.8
NU 422	**NU**	**NJ**	—	—	—	126	126	151	157	173	264	—	—	3	3	22.1
NU1024	**NU**	**NJ**	**NUP**	**N**	—	129	126.5	133	138	—	171	173.5	167	2	1	2.43
N 224	—	—	—	**N**	**NF**	131	—	—	—	—	—	204	196	2	2	5.63
NU 224 EM	**NU**	**NJ**	**NUP**	—	—	131	131	140	146	156	204	—	—	2	2	6.43
NU2224 EM	**NU**	**NJ**	**NUP**	—	—	131	131	140	146	156	204	—	—	2	2	9.51
N 324	—	—	—	**N**	**NF**	133	—	—	—	—	—	247	230	2.5	2.5	12.9
NU 324 EM	**NU**	**NJ**	**NUP**	—	—	133	133	150	156	171	247	—	—	2.5	2.5	15
NU2324 EM	**NU**	**NJ**	**NUP**	—	—	133	133	150	156	171	247	—	—	2.5	2.5	25
NU 424	**NU**	**NJ**	**NUP**	**N**	—	140	140	166	172	190	290	290	266	4	4	30.2

Notes (3) When L-shaped thrust collars (See section for L-Shaped Thrust Collars starting on page **B104**) are used, the bearings become the NH type.

(4) If axial loads are applied, increase d_a and reduce D_a from the values listed above.

(5) d_b (max.) are values for adjusting rings for NU, NJ Types.

Bore Diameter 130 – 160 mm

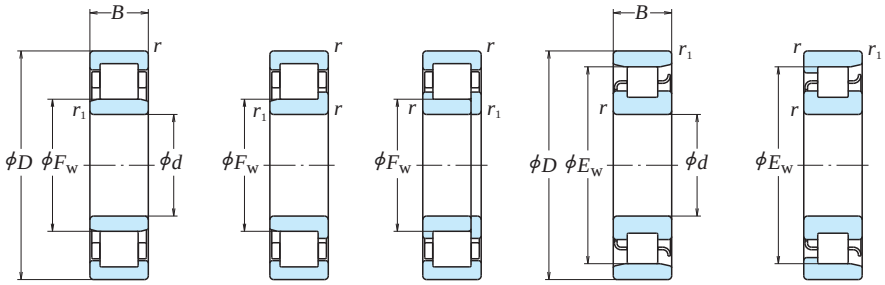

NU NJ NUP N NF

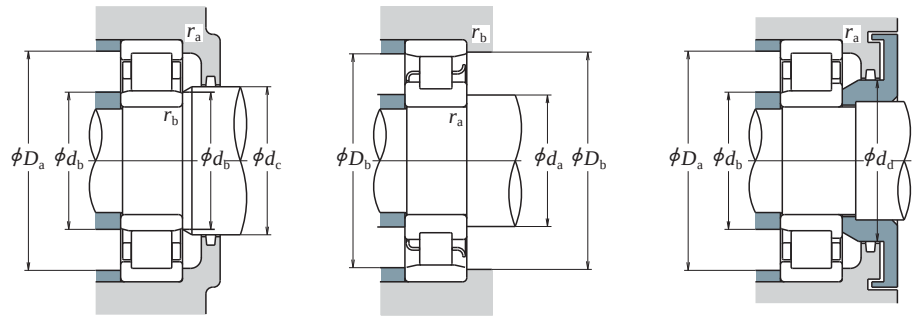

d	D	B	r min.	r1 min.	Fw	Ew	Cr	C0r	Grease	Oil	Bearing Numbers(2) NU	NJ (3)	NUP	N	NF	da(4) min.	db min.	db(5) max.	dc min.	dd min.	Da(4) max.	Db max.	Db min.	ra max.	rb max.	Mass (kg) approx.
130	200	33	2	1.1	148	182	172 000	238 000	3 200	3 800																
	230	40	3	3	—	204	270 000	340 000	2 600	3 200	**NU 1026**	**NU**	**NJ**	—	**N**	**NF**	139	136.5	146	151	—	191	193.5	184	2	1	3.66
	230	40	3	3	153.5	—	365 000	455 000	2 600	3 200	**N 226**	—	—	—	**N**	**NF**	143	—	—	—	—	—	217	208	2.5	2.5	6.48
											NU 226 EM	**NU**	**NJ**	**NUP**	—	—	143	143	150	158	168	217	—	—	2.5	2.5	8.03
	230	64	3	3	153.5	—	530 000	735 000	2 400	3 000	**NU2226 EM**	**NU**	**NJ**	**NUP**	—	—	143	143	150	158	168	217	—	—	2.5	2.5	9.44
	280	58	4	4	—	243	500 000	570 000	2 200	2 600	**N 326**	—	—	—	**N**	**NF**	146	—	—	—	—	—	264	247.5	3	3	17.7
	280	58	4	4	167	—	615 000	735 000	2 200	2 600	**NU326EM**	**NU**	**NJ**	**NUP**	—	—	146	146	163	169	184	264	—	—	3	3	18.7
	280	93	4	4	167	—	920 000	1 230 000	1 900	2 400	**NU2326EM**	**NU**	**NJ**	**NUP**	—	—	146	146	163	169	184	264	—	—	3	3	30
	340	78	5	5	185	285	825 000	955 000	1 800	2 200	**NU 426**	**NU**	**NJ**	—	—	**NF**	150	150	180	187	208	320	320	291	4	4	39.6
140	210	33	2	1.1	158	192	176 000	250 000	3 000	3 600	**NU1028**	**NU**	**NJ**	**NUP**	**N**	—	149	146.5	156	161	—	201	203.5	194	2	1	3.87
	250	42	3	3	—	221	297 000	375 000	2 400	3 000	**N 228**	—	—	—	**N**	**NF**	153	—	—	—	—	—	237	225	2.5	2.5	8.08
	250	42	3	3	169	—	395 000	515 000	2 400	3 000	**NU228EM**	**NU**	**NJ**	**NUP**	—	—	153	153	165	171	182	237	—	—	2.5	2.5	9.38
	250	68	3	3	169	—	550 000	790 000	2 200	2 800	**NU2228EM**	**NU**	**NJ**	**NUP**	—	—	153	153	165	171	182	237	—	—	2.5	2.5	15.2
	300	62	4	4	—	260	550 000	640 000	2 000	2 400	**N 328**	—	—	—	**N**	**NF**	156	—	—	—	—	—	284	266	3	3	21.7
	300	62	4	4	180	—	665 000	795 000	2 000	2 400	**NU328EM**	**NU**	**NJ**	**NUP**	—	—	156	156	176	182	198	284	—	—	3	3	22.8
	300	102	4	4	180	—	1 020 000	1 380 000	1 700	2 200	**NU2328EM**	**NU**	**NJ**	**NUP**	—	—	156	156	176	182	198	284	—	—	3	3	37.7
	360	82	5	5	198	302	875 000	1 020 000	1 700	2 000	**NU 428**	**NU**	**NJ**	—	**N**	—	160	160	193	200	222	340	340	308	4	4	46.4
150	225	35	2.1	1.5	169.5	205.5	202 000	294 000	2 800	3 400	**NU1030**	**NU**	**NJ**	—	**N**	**NF**	161	158	167	173	—	214	217	208	2	1.5	4.77
	270	45	3	3	—	238	360 000	465 000	2 200	2 800	**N 230**	—	—	—	**N**	**NF**	163	—	—	—	—	—	257	242	2.5	2.5	10.4
	270	45	3	3	182	—	450 000	595 000	2 200	2 800	**NU230EM**	**NU**	**NJ**	**NUP**	—	—	163	163	177	184	196	257	—	—	2.5	2.5	11.9
	270	73	3	3	182	—	635 000	930 000	2 000	2 600	**NU2230EM**	**NU**	**NJ**	**NUP**	—	—	163	163	177	184	196	257	—	—	2.5	2.5	19.3
	320	65	4	4	—	277	665 000	805 000	1 800	2 200	**N 330**	—	—	—	**N**	**NF**	166	—	—	—	—	—	304	283	3	3	25.8
	320	65	4	4	193	—	760 000	920 000	1 800	2 200	**NU330EM**	**NU**	**NJ**	**NUP**	—	—	166	166	188	195	213	304	—	—	3	3	27.1
	320	108	4	4	193	—	1 160 000	1 600 000	1 600	2 000	**NU2330EM**	**NU**	**NJ**	**NUP**	—	—	166	166	188	195	213	304	—	—	3	3	45.1
	380	85	5	5	213	—	930 000	1 120 000	1 600	2 000	**NU 430**	**NU**	**NJ**	—	—	—	170	170	208	216	237	360	—	—	4	4	55.8
160	240	38	2.1	1.5	180	220	238 000	340 000	2 600	3 200	**NU1032**	**NU**	**NJ**	—	**N**	**NF**	171	168	178	184	—	229	232	222	2	1.5	5.81
	290	48	3	3	—	255	430 000	570 000	2 200	2 600	**N 232**	—	—	—	**N**	**NF**	173	—	—	—	—	—	277	261	2.5	2.5	14.1
	290	48	3	3	195	—	500 000	665 000	2 200	2 600	**NU232EM**	**NU**	**NJ**	**NUP**	—	—	173	173	190	197	210	277	—	—	2.5	2.5	14.7
	290	80	3	3	193	—	810 000	1 190 000	1 900	2 400	**NU2232EM**	**NU**	**NJ**	**NUP**	—	—	173	173	188	197	210	277	—	—	2.5	2.5	24.5
	340	68	4	4	—	292	700 000	875 000	1 700	2 000	**N 332**	—	—	—	**N**	—	176	—	—	—	—	—	324	298	3	3	30.8
	340	68	4	4	204	—	860 000	1 050 000	1 700	2 000	**NU332EM**	**NU**	**NJ**	**NUP**	—	—	176	176	199	211	228	324	—	—	3	3	32.1
	340	114	4	4	204	—	1 310 000	1 820 000	1 500	1 900	**NU2332EM**	**NU**	**NJ**	**NUP**	—	—	176	176	199	211	228	324	—	—	3	3	53.9

Notes (1) The limiting speeds listed above apply to bearings with machined cages (No suffix). For bearings with pressed cages, reduce the limiting speed by 20%. (Not applicable to bearing numbers with an EM, EW, or ET suffix.)

(2) The bearings with suffix ET have polyamide cage. The maximum operating temperature should be less than 120 ℃.

Notes (3) When L-shaped thrust collars (See section for L-Shaped Thrust Collars starting on page **B104**) are used, the bearings become the NH type.

(4) If axial loads are applied, increase d_a and reduce D_a from the values listed above.

(5) d_b (max.) are values for adjusting rings for NU, NJ Types.

Bore Diameter 170 – 220 mm

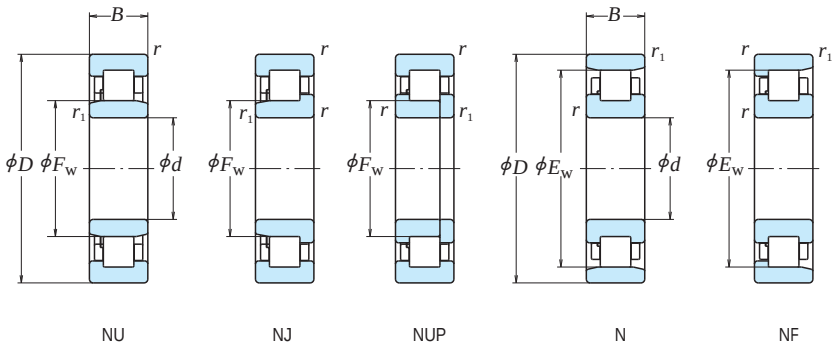

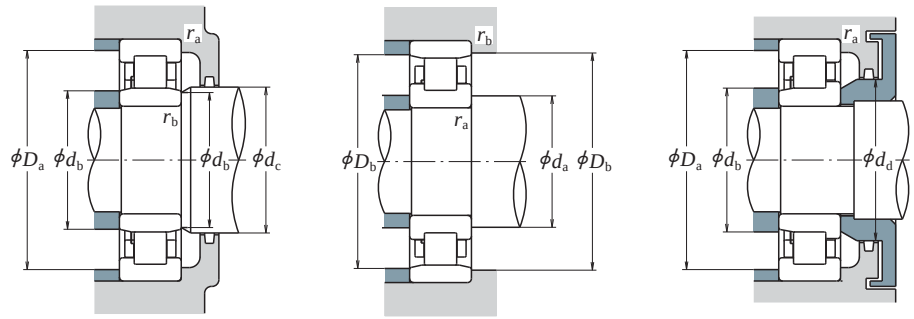

d	Boundary Dimensions (mm) D	B	r min.	r1 min.	Fw	Ew	Basic Load Ratings (N) Cr	C0r	Limiting Speeds (min⁻¹) Grease	Oil	Bearing Numbers (1) NU	NJ	NUP	N	NF	Abutment and Fillet Dimensions (mm) da(2) min.	db min.	db(3) max.	dc min.	dd min.	Da(2) max.	Db max.	Db min.	ra max.	rb max.	Mass (kg) approx.
170	260	42	2.1	2.1	193	237	287 000	415 000	2 400	2 800	**NU1034**	**NU**	**NJ**	—	**N**	—	181	181	190	197	—	249	249	239	2	2	7.91
	310	52	4	4	—	272	475 000	635 000	2 000	2 400	**N 234**	—	—	—	**N**	**NF**	186	—	—	—	—	—	294	278	3	3	17.4
	310	52	4	4	207	—	605 000	800 000	2 000	2 400	**NU234EM**	**NU**	**NJ**	**NUP**	—	—	186	186	202	211	223	294	—	—	3	3	18.3
	310	86	4	4	205	—	925 000	1 330 000	1 800	2 200	**NU2234EM**	**NU**	**NJ**	**NUP**	—	—	186	186	200	211	223	294	—	—	3	3	29.9
	360	72	4	4	—	310	795 000	1 010 000	1 600	2 000	**N 334**	—	—	—	**N**	—	186	—	—	—	—	—	344	316	3	3	36.6
	360	72	4	4	218	—	930 000	1 150 000	1 600	2 000	**NU334EM**	**NU**	**NJ**	**NUP**	—	—	186	186	213	223	241	344	—	—	3	3	37.9
	360	120	4	4	216	—	1 490 000	2 070 000	1 400	1 800	**NU2334EM**	**NU**	**NJ**	**NUP**	—	—	186	186	210	223	241	344	—	—	3	3	63.4
180	280	46	2.1	2.1	205	255	355 000	510 000	2 200	2 600	**NU1036**	**NU**	**NJ**	—	**N**	**NF**	191	191	202	209	—	269	269	258	2	2	10.2
	320	52	4	4	—	282	495 000	675 000	1 900	2 200	**N 236**	—	—	—	**N**	**NF**	196	—	—	—	—	—	304	288	3	3	18.1
	320	52	4	4	217	—	625 000	850 000	1 900	2 200	**NU236EM**	**NU**	**NJ**	**NUP**	—	—	196	196	212	221	233	304	—	—	3	3	19
	320	86	4	4	215	—	1 010 000	1 510 000	1 700	2 000	**NU2236EM**	**NU**	**NJ**	**NUP**	—	—	196	196	210	221	233	304	—	—	3	3	31.4
	380	75	4	4	—	328	905 000	1 150 000	1 500	1 800	**N 336**	—	—	—	**N**	**NF**	196	—	—	—	—	—	364	335	3	3	42.6
	380	75	4	4	231	—	985 000	1 230 000	1 500	1 800	**NU336EM**	**NU**	**NJ**	**NUP**	—	—	196	196	226	235	255	364	—	—	3	3	44
	380	126	4	4	227	—	1 560 000	2 220 000	1 300	1 700	**NU2336EM**	**NU**	**NJ**	**NUP**	—	—	196	196	222	235	255	364	—	—	3	3	74.6
190	290	46	2.1	2.1	215	265	365 000	535 000	2 000	2 600	**NU1038**	**NU**	**NJ**	—	**N**	—	201	201	212	219	—	279	279	268	2	2	10.7
	340	55	4	4	—	299	555 000	770 000	1 800	2 200	**N 238**	—	—	—	**N**	**NF**	206	—	—	—	—	—	324	305	3	3	22
	340	55	4	4	230	—	695 000	955 000	1 800	2 200	**NU238EM**	**NU**	**NJ**	**NUP**	—	—	206	206	225	234	247	324	—	—	3	3	23
	340	92	4	4	228	—	1 100 000	1 670 000	1 600	2 000	**NU2238EM**	**NU**	**NJ**	**NUP**	—	—	206	206	223	234	247	324	—	—	3	3	38.3
	400	78	5	5	—	345	975 000	1 260 000	1 400	1 700	**N 338**	—	—	—	**N**	—	210	—	—	—	—	—	380	352	4	4	48.7
	400	78	5	5	245	—	1 060 000	1 340 000	1 400	1 700	**NU338EM**	**NU**	**NJ**	**NUP**	—	—	210	210	240	248	268	380	—	—	4	4	50.6
	400	132	5	5	240	—	1 770 000	2 520 000	1 300	1 600	**NU2338EM**	**NU**	**NJ**	**NUP**	—	—	210	210	235	248	268	380	—	—	4	4	86.2
200	310	51	2.1	2.1	229	281	390 000	580 000	2 000	2 400	**NU1040**	**NU**	**NJ**	—	**N**	**NF**	211	211	226	233	—	299	299	284	2	2	14
	360	58	4	4	—	316	620 000	865 000	1 700	2 000	**N 240**	—	—	—	**N**	**NF**	216	—	—	—	—	—	344	323	3	3	26.2
	360	58	4	4	243	—	765 000	1 060 000	1 700	2 000	**NU240EM**	**NU**	**NJ**	**NUP**	—	—	216	216	238	247	261	344	—	—	3	3	27.4
	360	98	4	4	241	—	1 220 000	1 870 000	1 500	1 800	**NU2240EM**	**NU**	**NJ**	**NUP**	—	—	216	216	235	247	261	344	—	—	3	3	46.1
	420	80	5	5	—	360	975 000	1 270 000	1 300	1 600	**N 340**	—	—	—	**N**	**NF**	220	—	—	—	—	—	400	367	4	4	55.3
	420	80	5	5	258	—	1 140 000	1 450 000	1 300	1 600	**NU340EM**	**NU**	**NJ**	**NUP**	—	—	220	220	252	263	283	400	—	—	4	4	57.1
	420	138	5	5	253	—	1 910 000	2 760 000	1 200	1 500	**NU2340EM**	**NU**	**NJ**	**NUP**	—	—	220	220	247	263	283	400	—	—	4	4	99.3
220	340	56	3	3	250	310	500 000	750 000	1 800	2 200	**NU1044**	**NU**	**NJ**	—	**N**	—	233	233	247	254	—	327	327	313	2.5	2.5	18.2
	400	65	4	4	—	350	760 000	1 080 000	1 500	1 800	**N 244**	—	—	—	**N**	**NF**	236	—	—	—	—	—	384	357	3	3	37
	400	65	4	4	270	—	760 000	1 080 000	1 500	1 800	**NU 244**	**NU**	**NJ**	**NUP**	—	—	236	236	264	273	289	384	—	—	3	3	37.3
	400	108	4	4	270	—	1 140 000	1 810 000	1 300	1 600	**NU2244**	**NU**	—	—	—	—	—	236	264	273	289	384	—	—	3	3	61.8
	460	88	5	5	—	396	1 190 000	1 570 000	1 200	1 500	**N 344**	—	—	—	**N**	—	240	—	—	—	—	—	440	403	4	4	72.8
	460	88	5	5	284	—	1 190 000	1 570 000	1 200	1 500	**NU 344**	**NU**	**NJ**	—	—	—	240	240	278	287	307	440	—	—	4	4	74.6

Notes (1) When L-shaped thrust collars (Refer to page **B105**) are used, the bearings become the NH Type.
(2) If axial loads are applied, increase d_a and reduce D_a from the values listed above.
(3) d_b (max.) are values for adjusting rings for NU, NJ Types.

Bore Diameter 240 – 500 mm

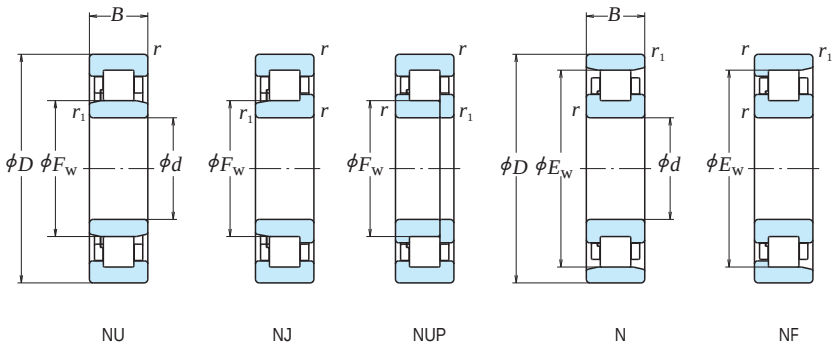

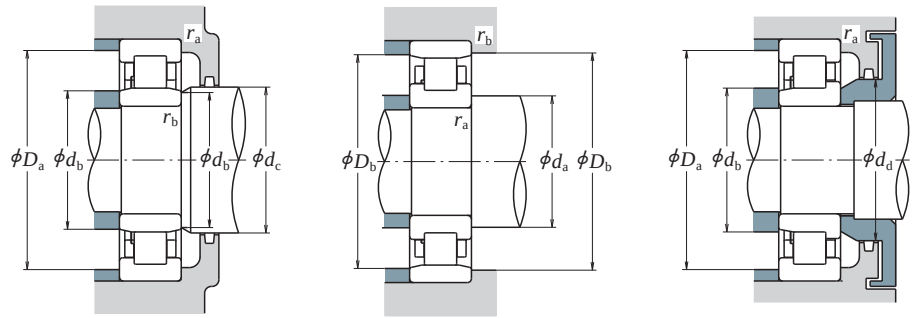

d	Boundary Dimensions (mm) D	B	r min.	r1 min.	Fw	Ew	Basic Load Ratings (N) Cr	C0r	Limiting Speeds (min⁻¹) Grease	Oil
240	360	56	3	3	270	330	530 000	820 000	1 600	2 000
	440	72	4	4	—	385	935 000	1 340 000	1 300	1 600
	440	72	4	4	295	—	935 000	1 340 000	1 300	1 600
	440	120	4	4	295	—	1 440 000	2 320 000	1 200	1 500
	500	95	5	5	—	430	1 360 000	1 820 000	1 100	1 300
	500	95	5	5	310	—	1 360 000	1 820 000	1 100	1 300
260	400	65	4	4	296	364	645 000	1 000 000	1 500	1 800
	480	80	5	5	—	420	1 100 000	1 580 000	1 200	1 500
	480	80	5	5	320	—	1 100 000	1 580 000	1 200	1 500
	480	130	5	5	320	—	1 710 000	2 770 000	1 100	1 300
	540	102	6	6	336	—	1 540 000	2 090 000	1 000	1 200
280	420	65	4	4	316	384	660 000	1 050 000	1 400	1 700
	500	80	5	5	—	440	1 140 000	1 680 000	1 100	1 400
	500	80	5	5	340	—	1 140 000	1 680 000	1 100	1 400
300	460	74	4	4	340	420	885 000	1 400 000	1 300	1 500
	540	85	5	5	364	—	1 400 000	2 070 000	1 100	1 300
320	480	74	4	4	360	440	905 000	1 470 000	1 200	1 400
	580	92	5	5	—	510	1 540 000	2 270 000	950	1 200
	580	92	5	5	390	—	1 540 000	2 270 000	950	1 200
340	520	82	5	5	385	475	1 080 000	1 740 000	1 100	1 300
360	540	82	5	5	405	495	1 110 000	1 830 000	1 000	1 300
380	560	82	5	5	425	—	1 140 000	1 910 000	1 000	1 200
400	600	90	5	5	450	550	1 360 000	2 280 000	900	1 100
420	620	90	5	5	470	570	1 390 000	2 380 000	850	1 100
440	650	94	6	6	493	—	1 470 000	2 530 000	800	1 000
460	680	100	6	6	516	624	1 580 000	2 740 000	750	950
480	700	100	6	6	536	644	1 620 000	2 860 000	750	900
500	720	100	6	6	556	664	1 660 000	2 970 000	710	850

Notes (1) When L-shaped thrust collars (Refer to page **B105**) are used, the bearings become the NH Type.
(2) If axial loads are applied, increase d_a and reduce D_a from the values listed above.
(3) d_b (max.) are values for adjusting rings for NU, NJ Types.

Bearing Numbers (1) NU	NJ	NUP	N	NF	Abutment and Fillet Dimensions (mm) da(2) min.	db min.	db(3) max.	dc min.	dd min.	Da(2) max.	Db max.	Db min.	ra max.	rb max.	Mass (kg) approx.
NU1048	**NJ**	—	**N**	—	253	253	266	275	—	347	347	333	2.5	2.5	19.5
N 248	—	—	**N**	**NF**	256	—	—	—	—	—	424	392	3	3	49.6
NU 248	**NJ**	**NUP**	—	—	256	256	289	298	316	424	—	—	3	3	50.4
NU2248	**NU**	—	—	—	—	256	289	298	316	424	—	—	3	3	84.9
N 348	—	—	**N**	—	260	—	—	—	—	—	480	438	4	4	92.3
NU 348	**NJ**	—	—	—	260	260	304	313	333	480	—	—	4	4	94.6
NU1052	**NJ**	—	**N**	**NF**	276	276	292	300	—	384	384	367	3	3	29.1
N 252	—	—	**N**	—	280	—	—	—	—	—	460	428	4	4	66.2
NU 252	**NJ**	—	—	—	280	280	314	323	343	460	—	—	4	4	67.1
NU2252	—	**NUP**	—	—	280	280	314	323	343	460	—	—	4	4	111
NU 352	**NJ**	—	—	—	286	286	330	339	359	514	—	—	5	5	118
NU1056	**NJ**	**NUP**	**N**	**NF**	296	296	312	320	—	404	404	387	3	3	30.8
N 256	—	—	**N**	**NF**	300	—	—	—	—	—	480	448	4	4	69.6
NU 256	**NJ**	—	—	—	300	300	334	344	364	480	—	—	4	4	70.7
NU1060	**NJ**	—	**N**	**NF**	316	316	336	344	—	444	444	424	3	3	43.7
NU 260	**NJ**	—	—	—	320	320	358	368	391	520	—	—	4	4	89.2
NU1064	**NU**	—	**N**	**NF**	336	336	356	365	—	464	464	444	3	3	46.1
N 264	—	—	**N**	—	340	—	—	—	—	—	560	519	4	4	110
NU 264	**NJ**	—	—	—	340	340	384	394	420	560	—	—	4	4	112
NU1068	**NJ**	—	**N**	**NF**	360	360	381	390	—	500	500	479	4	4	61.8
NU1072	**NU**	—	**N**	**NF**	380	380	400	410	—	520	520	499	4	4	64.6
NU1076	**NU**	—	—	—	—	400	420	430	—	540	—	—	4	4	67.5
NU1080	**NU**	**NUP**	**N**	—	420	420	445	455	—	580	580	554.5	4	4	88.2
NU1084	**NU**	—	**N**	—	440	440	465	475	—	600	600	574.5	4	4	91.7
NU1088	**NU**	—	—	—	—	466	488	498	—	624	—	—	5	5	105
NU1092	**NU**	**NUP**	**N**	—	486	486	511	521	—	654	654	628.5	5	5	123
NU1096	**NJ**	—	**N**	—	506	506	531	541	—	674	674	654	5	5	127
NU10/500	**NU**	—	**N**	—	526	526	551	558	—	694	694	674	5	5	131

L-Shaped Thrust Collars

Bore Diameter 20 – 85 mm

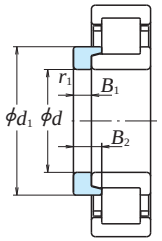

L-Shaped Thrust Collar

Boundary Dimensions (mm) d	d_1	B_1	B_2	r_1 min.	Bearing Numbers	Mass (kg) approx.
20	30	3	6.75	0.6	**HJ 204**	0.012
	29.8	3	5.5	0.6	**HJ 204 E**	0.011
	30	3	7.5	0.6	**HJ 2204**	0.012
	29.8	3	6.5	0.6	**HJ 2204 E**	0.012
	31.7	4	7.5	0.6	**HJ 304**	0.017
	31.4	4	6.5	0.6	**HJ 304 E**	0.017
	31.8	4	8.5	0.6	**HJ 2304**	0.017
	31.4	4	7.5	0.6	HJ 2304 E	0.018
25	34.8	3	6	0.6	**HJ 205 E**	0.014
	34.8	3	6.5	0.6	**HJ 2205 E**	0.014
	38.2	4	7	1.1	**HJ 305 E**	0.025
	38.2	4	8	1.1	HJ 2305 E	0.026
	43.6	6	10.5	1.5	**HJ 405**	0.057
30	41.3	4	7	0.6	**HJ 206 E**	0.025
	41.4	4	7.5	0.6	**HJ 2206 E**	0.025
	45.1	5	8.5	1.1	**HJ 306 E**	0.042
	45.1	5	9.5	1.1	HJ 2306 E	0.043
	50.5	7	11.5	1.5	**HJ 406**	0.080
35	48.2	4	7	0.6	**HJ 207 E**	0.033
	48.2	4	8.5	0.6	**HJ 2207 E**	0.035
	51.1	6	9.5	1.1	**HJ 307 E**	0.060
	51.1	6	11	1.1	HJ 2307 E	0.062
	59	8	13	1.5	**HJ 407**	0.12
40	54.1	5	8.5	1.1	**HJ 208 E**	0.049
	54.1	5	9	1.1	**HJ 2208 E**	0.050
	57.6	7	11	1.5	**HJ 308 E**	0.088
	57.7	7	12.5	1.5	HJ 2308 E	0.091
	64.8	8	13	2	**HJ 408**	0.14
45	59.1	5	8.5	1.1	**HJ 209 E**	0.055
	59.1	5	9	1.1	**HJ 2209 E**	0.055
	64.5	7	11.5	1.5	**HJ 309 E**	0.11
	64.5	7	13	1.5	HJ 2309 E	0.113
	71.7	8	13.5	2	**HJ 409**	0.175
50	64.1	5	9	1.1	**HJ 210 E**	0.061
	64.1	5	9	1.1	**HJ 2210 E**	0.061
	71.4	8	13	2	**HJ 310 E**	0.151
	71.4	8	14.5	2	HJ 2310 E	0.155
	78.8	9	14.5	2.1	**HJ 410**	0.23

Boundary Dimensions (mm) d	d_1	B_1	B_2	r_1 min.	Bearing Numbers	Mass (kg) approx.
55	70.9	6	9.5	1.1	**HJ 211 E**	0.087
	70.9	6	10	1.1	**HJ 2211 E**	0.088
	77.6	9	14	2	**HJ 311 E**	0.195
	77.6	9	15.5	2	HJ 2311 E	0.20
	85.2	10	16.5	2.1	**HJ 411**	0.29
60	77.7	6	10	1.5	**HJ 212 E**	0.108
	77.7	6	10	1.5	**HJ 2212 E**	0.108
	84.5	9	14.5	2.1	**HJ 312 E**	0.231
	84.5	9	16	2.1	HJ 2312 E	0.237
	91.8	10	16.5	2.1	**HJ 412**	0.34
65	84.5	6	10	1.5	HJ 213 E	0.129
	84.5	6	10.5	1.5	HJ 2213 E	0.131
	90.6	10	15.5	2.1	HJ 313 E	0.288
	90.6	10	18	2.1	HJ 2313 E	0.298
	98.5	11	18	2.1	**HJ 413**	0.42
70	89.5	7	11	1.5	HJ 214 E	0.157
	89.5	7	11.5	1.5	HJ 2214 E	0.158
	97.5	10	15.5	2.1	HJ 314 E	0.33
	97.5	10	18.5	2.1	HJ 2314 E	0.345
	110.5	12	20	3	**HJ 414**	0.605
75	94.5	7	11	1.5	HJ 215 E	0.166
	94.5	7	11.5	1.5	HJ 2215 E	0.167
	104.2	11	16.5	2.1	HJ 315 E	0.41
	104.2	11	19.5	2.1	HJ 2315 E	0.43
	116	13	21.5	3	**HJ 415**	0.71
80	101.6	8	12.5	2	HJ 216 E	0.222
	101.6	8	12.5	2	HJ 2216 E	0.222
	110.6	11	17	2.1	HJ 316 E	0.46
	110.6	11	20	2.1	HJ 2316 E	0.48
	122	13	22	3	**HJ 416**	0.78
85	107.6	8	12.5	2	HJ 217 E	0.25
	107.6	8	13	2	HJ 2217 E	0.252
	117.9	12	18.5	3	HJ 317 E	0.575
	117.9	12	22	3	HJ 2317 E	0.595
	126	14	24	4	**HJ 417**	0.88

Bore Diameter 90 – 320 mm

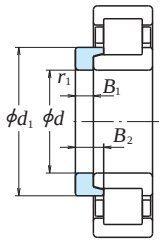

L-Shaped Thrust Collar

Boundary Dimensions (mm) d	d_1	B_1	B_2	r_1 min.	Bearing Numbers	Mass (kg) approx.
90	114.3	9	14	2	HJ 218 E	0.32
	114.3	9	15	2	HJ 2218 E	0.325
	124.2	12	18.5	3	HJ 318 E	0.63
	124.2	12	22	3	HJ 2318 E	0.66
	137	14	24	4	**HJ 418**	1.05
95	120.6	9	14	2.1	HJ 219 E	0.355
	120.6	9	15.5	2.1	HJ 2219 E	0.365
	132.2	13	20.5	3	HJ 319 E	0.785
	132.2	13	24.5	3	HJ 2319 E	0.815
	147	15	25.5	4	**HJ 419**	1.3
100	127.5	10	15	2.1	HJ 220 E	0.44
	127.5	10	16	2.1	HJ 2220 E	0.45
	139.6	13	20.5	3	HJ 320 E	0.89
	139.6	13	23.5	3	HJ 2320 E	0.92
	153.5	16	27	4	**HJ 420**	1.5
105	145	13	20.5	3	**HJ 321 E**	0.97
	159.5	16	27	4	**HJ 421**	1.65
110	141.7	11	17	2.1	HJ 222 E	0.62
	141.7	11	19.5	2.1	HJ 2222 E	0.645
	155.8	14	22	3	HJ 322 E	1.21
	155.8	14	26.5	3	HJ 2322 E	1.27
	171	17	29.5	4	**HJ 422**	2.1
120	153.4	11	17	2.1	HJ 224 E	0.71
	153.4	11	20	2.1	HJ 2224 E	0.745
	168.6	14	22.5	3	HJ 324 E	1.41
	168.6	14	26	3	HJ 2324 E	1.46
	188	17	30.5	5	**HJ 424**	2.6
130	164.2	11	17	3	HJ 226 E	0.79
	164.2	11	21	3	HJ 2226 E	0.84
	182.3	14	23	4	HJ 326 E	1.65
	182.3	14	28	4	HJ 2326 E	1.73
	205	18	32	5	**HJ 426**	3.3
140	180	11	18	3	HJ 228 E	0.99
	180	11	23	3	HJ 2228 E	1.07
	196	15	25	4	HJ 328 E	2.04
	196	15	31	4	HJ 2328 E	2.14
	219	18	33	5	**HJ 428**	3.75

Boundary Dimensions (mm) d	d_1	B_1	B_2	r_1 min.	Bearing Numbers	Mass (kg) approx.
150	193.7	12	19.5	3	HJ 230 E	1.26
	193.7	12	24.5	3	HJ 2230 E	1.35
	210	15	25	4	HJ 330 E	2.35
	210	15	31.5	4	HJ 2330 E	2.48
	234	20	36.5	5	**HJ 430**	4.7
160	207.3	12	20	3	HJ 232 E	1.48
	206.1	12	24.5	3	HJ 2232 E	1.55
	222	15	25	4	HJ 332 E	2.59
	222.1	15	32	4	HJ 2332 E	2.76
170	220.8	12	20	4	HJ 234 E	1.7
	219.5	12	24	4	HJ 2234 E	1.79
	238	16	33.5	4	**HJ 2334 E**	3.25
180	230.8	12	20	4	HJ 236 E	1.79
	229.5	12	24	4	HJ 2236 E	1.88
	252	17	35	4	**HJ 2336 E**	3.85
190	244.5	13	21.5	4	HJ 238 E	2.19
	243.2	13	26.5	4	HJ 2238 E	2.31
	260.6	18	36.5	5	**HJ 2338 E**	4.45
200	258.2	14	23	4	HJ 240 E	2.65
	258	14	34	4	**HJ 2240**	2.6
	256.9	14	28	4	HJ 2240 E	2.78
	280	18	30	5	**HJ 340 E**	5.0
220	286	15	27.5	4	**HJ 244**	3.55
	286	15	36.5	4	**HJ 2244**	3.55
	307	20	36	5	**HJ 344**	7.05
240	313	16	29.5	4	**HJ 248**	4.65
	313	16	38.5	4	**HJ 2248**	4.65
	334	22	39.5	5	**HJ 348**	8.2
260	340	18	33	5	**HJ 252**	6.2
	340	18	40.5	5	**HJ 2252**	6.2
	362	24	43	6	**HJ 352**	11.4
280	360	18	33	5	**HJ 256**	7.4
300	387	20	34.5	5	**HJ 260**	9.15
320	415	21	37	5	**HJ 264**	11.3

Bore Diameter 25 – 140 mm

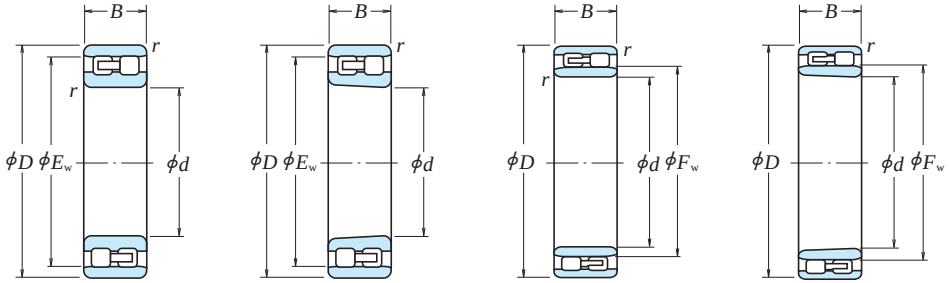

NN Cylindrical Bore | NN Tapered Bore | NNU Cylindrical Bore | NNU Tapered Bore

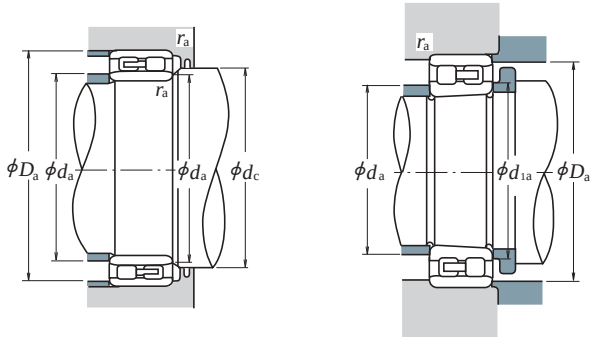

Boundary Dimensions (mm)						Basic Load Ratings (N)		Limiting Speeds (min⁻¹)	
d	D	B	r min.	F_W	E_W	C_r	C_{0r}	Grease	Oil
25	47	16	0.6	—	41.3	25 800	30 000	14 000	17 000
30	55	19	1	—	48.5	31 000	37 000	12 000	14 000
35	62	20	1	—	55	39 500	50 000	10 000	12 000
40	68	21	1	—	61	43 500	55 500	9 000	11 000
45	75	23	1	—	67.5	52 000	68 500	8 500	10 000
50	80	23	1	—	72.5	53 000	72 500	7 500	9 000
55	90	26	1.1	—	81	69 500	96 500	6 700	8 000
60	95	26	1.1	—	86.1	73 500	106 000	6 300	7 500
65	100	26	1.1	—	91	77 000	116 000	6 000	7 100
70	110	30	1.1	—	100	97 500	148 000	5 600	6 700
75	115	30	1.1	—	105	96 500	149 000	5 300	6 300
80	125	34	1.1	—	113	119 000	186 000	4 800	6 000
85	130	34	1.1	—	118	125 000	201 000	4 500	5 600
90	140	37	1.5	—	127	143 000	228 000	4 300	5 000
95	145	37	1.5	—	132	150 000	246 000	4 000	5 000
100	140	40	1.1	112	—	155 000	295 000	4 000	5 000
	150	37	1.5	—	137	157 000	265 000	4 000	4 800
105	145	40	1.1	117	—	161 000	315 000	3 800	4 800
	160	41	2	—	146	198 000	320 000	3 800	4 500
110	150	40	1.1	122	—	167 000	335 000	3 600	4 500
	170	45	2	—	155	229 000	375 000	3 400	4 300
120	165	45	1.1	133.5	—	183 000	360 000	3 200	4 000
	180	46	2	—	165	239 000	405 000	3 200	3 800
130	180	50	1.5	144	—	274 000	545 000	3 000	3 800
	200	52	2	—	182	284 000	475 000	3 000	3 600
140	190	50	1.5	154	—	283 000	585 000	2 800	3 600
	210	53	2	—	192	298 000	515 000	2 800	3 400

Bearing Numbers		Abutment and Fillet Dimensions (mm)							Mass (kg)
Cylindrical Bore	Tapered Bore(1)	d_a(2) min.	d_a(2) max.	d_{1a} min.	d_c min.	D_a max.	D_a min.	r_a max.	approx.
NN 3005	**NN 3005 K**	29	—	29	—	43	42	0.6	0.127
NN 3006	**NN 3006 K**	35	—	36	—	50	50	1	0.198
NN 3007	**NN 3007 K**	40	—	41	—	57	56	1	0.258
NN 3008	**NN 3008 K**	45	—	46	—	63	62	1	0.309
NN 3009	**NN 3009 K**	50	—	51	—	70	69	1	0.407
NN 3010	**NN 3010 K**	55	—	56	—	75	74	1	0.436
NN 3011	**NN 3011 K**	61.5	—	62	—	83.5	83	1	0.647
NN 3012	**NN 3012 K**	66.5	—	67	—	88.5	88	1	0.693
NN 3013	**NN 3013 K**	71.5	—	72	—	93.5	93	1	0.741
NN 3014	**NN 3014 K**	76.5	—	77	—	103.5	102	1	1.06
NN 3015	**NN 3015 K**	81.5	—	82	—	108.5	107	1	1.11
NN 3016	**NN 3016 K**	86.5	—	87	—	118.5	115	1	1.54
NN 3017	**NN 3017 K**	91.5	—	92	—	123.5	120	1	1.63
NN 3018	**NN 3018 K**	98	—	99	—	132	129	1.5	2.09
NN 3019	**NN 3019 K**	103	—	104	—	137	134	1.5	2.19
NNU 4920	**NNU 4920 K**	106.5	111	108	115	133.5	—	1	1.9
NN 3020	**NN 3020 K**	108	—	109	—	142	139	1.5	2.28
NNU 4921	**NNU 4921 K**	111.5	116	113	120	138.5	—	1	1.99
NN 3021	**NN 3021 K**	114	—	115	—	151	148	2	2.88
NNU 4922	**NNU 4922 K**	116.5	121	118	125	143.5	—	1	2.07
NN 3022	**NN 3022 K**	119	—	121	—	161	157	2	3.71
NNU 4924	**NNU 4924 K**	126.5	133	128	137	158.5	—	1	2.85
NN 3024	**NN 3024 K**	129	—	131	—	171	167	2	4.04
NNU 4926	**NNU 4926 K**	138	143	140	148	172	—	1.5	3.85
NN 3026	**NN 3026 K**	139	—	141	—	191	185	2	5.88
NNU 4928	**NNU 4928 K**	148	153	150	158	182	—	1.5	4.08
NN 3028	**NN 3028 K**	149	—	151	—	201	195	2	6.34

Note (1) The suffix K represents bearings with tapered bores (taper 1 : 12).

Remarks Production of double-row cylindrical roller bearings is generally in the high precision classes (Class 5 or better).

Note (2) d_a (max.) are values for adjusting rings for the NNU Type.

Bore Diameter 150 – 360 mm

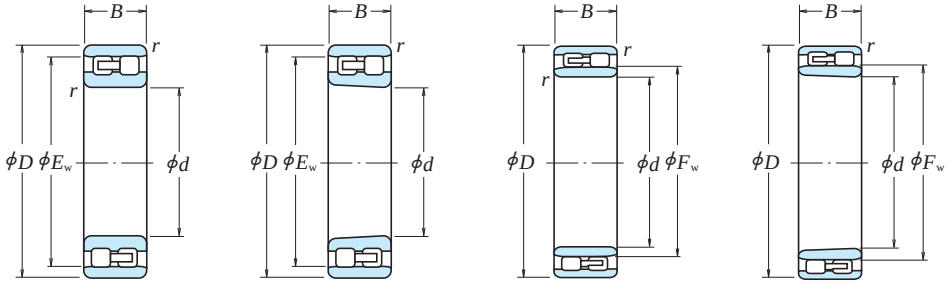

NN Cylindrical Bore | NN Tapered Bore | NNU Cylindrical Bore | NNU Tapered Bore

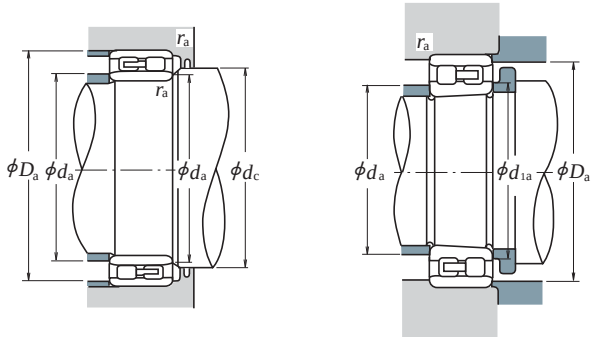

Boundary Dimensions (mm)						Basic Load Ratings (N)		Limiting Speeds (min⁻¹)	
d	D	B	r min.	F_W	E_W	C_r	C_{0r}	Grease	Oil
150	210	60	2	167	—	350 000	715 000	2 600	3 200
	225	56	2.1	—	206	335 000	585 000	2 600	3 000
160	220	60	2	177	—	365 000	760 000	2 400	3 000
	240	60	2.1	—	219	375 000	660 000	2 400	2 800
170	230	60	2	187	—	375 000	805 000	2 400	2 800
	260	67	2.1	—	236	450 000	805 000	2 200	2 600
180	250	69	2	200	—	480 000	1 020 000	2 200	2 600
	280	74	2.1	—	255	565 000	995 000	2 000	2 400
190	260	69	2	211.5	—	485 000	1 060 000	2 000	2 600
	290	75	2.1	—	265	595 000	1 080 000	2 000	2 400
200	280	80	2.1	223	—	570 000	1 220 000	1 900	2 400
	310	82	2.1	—	282	655 000	1 170 000	1 800	2 200
220	300	80	2.1	243	—	600 000	1 330 000	1 700	2 200
	340	90	3	—	310	815 000	1 480 000	1 700	2 000
240	320	80	2.1	263	—	625 000	1 450 000	1 600	2 000
	360	92	3	—	330	855 000	1 600 000	1 500	1 800
260	360	100	2.1	289	—	935 000	2 100 000	1 400	1 800
	400	104	4	—	364	1 030 000	1 920 000	1 400	1 700
280	380	100	2.1	309	—	960 000	2 230 000	1 300	1 700
	420	106	4	—	384	1 080 000	2 080 000	1 300	1 500
300	420	118	3	336	—	1 230 000	2 870 000	1 200	1 500
	460	118	4	—	418	1 290 000	2 460 000	1 200	1 400
320	440	118	3	356	—	1 260 000	3 050 000	1 100	1 400
	480	121	4	—	438	1 350 000	2 670 000	1 100	1 300
340	520	133	5	—	473	1 670 000	3 300 000	1 000	1 200
360	540	134	5	—	493	1 700 000	3 450 000	950	1 200

Bearing Numbers		Abutment and Fillet Dimensions (mm)							Mass (kg)
Cylindrical Bore	Tapered Bore(1)	d_a(2) min.	d_a(2) max.	d_{1a} min.	d_c min.	D_a max.	D_a min.	r_a max.	approx.
NNU 4930	**NNU 4930 K**	159	166	162	171	201	—	2	6.39
NN 3030	**NN 3030 K**	161	—	162	—	214	209	2	7.77
NNU 4932	**NNU 4932 K**	169	176	172	182	211	—	2	6.76
NN 3032	**NN 3032 K**	171	—	172	—	229	222	2	9.41
NNU 4934	**NNU 4934 K**	179	186	182	192	221	—	2	7.12
NN 3034	**NN 3034 K**	181	—	183	—	249	239	2	12.8
NNU 4936	**NNU 4936 K**	189	199	193	205	241	—	2	10.4
NN 3036	**NN 3036 K**	191	—	193	—	269	258	2	16.8
NNU 4938	**NNU 4938 K**	199	211	203	217	251	—	2	10.9
NN 3038	**NN 3038 K**	201	—	203	—	279	268	2	17.8
NNU 4940	**NNU 4940 K**	211	222	214	228	269	—	2	15.3
NN 3040	**NN 3040 K**	211	—	214	—	299	285	2	22.7
NNU 4944	**NNU 4944 K**	231	242	234	248	289	—	2	16.6
NN 3044	**NN 3044 K**	233	—	236	—	327	313	2.5	29.6
NNU 4948	**NNU 4948 K**	251	262	254	269	309	—	2	18
NN 3048	**NN 3048 K**	253	—	256	—	347	334	2.5	32.7
NNU 4952	**NNU 4952 K**	271	288	275	295	349	—	2	31.1
NN 3052	**NN 3052 K**	276	—	278	—	384	368	3	47.7
NNU 4956	**NNU 4956 K**	291	308	295	315	369	—	2	33
NN 3056	**NN 3056 K**	296	—	298	—	404	388	3	51.1
NNU 4960	**NNU 4960 K**	313	335	318	343	407	—	2.5	51.9
NN 3060	**NN 3060 K**	316	—	319	—	444	422	3	70.7
NNU 4964	**NNU 4964 K**	333	355	338	363	427	—	2.5	54.9
NN 3064	**NN 3064 K**	336	—	340	—	464	442	3	76.6
NN 3068	**NN 3068 K**	360	—	365	—	500	477	4	102
NN 3072	**NN 3072 K**	380	—	385	—	520	497	4	106

Note (1) The suffix K represents bearings with tapered bores (taper 1 : 12).

Remarks Production of double-row cylindrical roller bearings is generally in the high precision classes (Class 5 or better).

Note (2) d_a (max.) are values for adjusting rings for the NNU Type.